SECTION
LIFT STATIONS

Page List	
Page Number	Page Title
COVER	COVER
LS-01	240 V 3-PHASE-MOTOR CONTROL CENTER-PANEL MOUNTING
LS-02	240 V 3-PHASE-MOTOR CONTROL CENTER-PANEL LAYOUT
LS-03	240 V 3-PHASE CONTROL PANEL SCHEMATIC-1
LS-04	240 V 3-PHASE CONTROL PANEL SCHEMATIC-1
LS-05	240 V 3-PHASE MOTOR CONTROL CENTER- PANEL LEGEND
LS-06	240 V 3-PHASE-EQUIPMENT SPECIFICATION
LS-07	240 V 3-PHASE-MOTOR CONTROL CENTER-LABEL SPECIFICATION
LS-08	240 V 3-PHASE-MOTOR CONTROL CENTER (MCC) MOUNTING NOTES
LS-09	240 V 3-PHASE-TCU FUNCTIONS
LS-10	SITE PLAN-ABOVE GROUND VALVES- STANDARD LIFT STATION
[illegible]	[illegible]
LS-12	SECTION A-ABOVE GROUND VALVES- STANDARD LIFT STATION
LS-13	DETAILS A & B-ABOVE GROUND VALVES- STANDARD LIFT STATION
LS-14	AIR RELEASE-ABOVE GROUND VALVES- STANDARD LIFT STATION
LS-15	PIPE SUPPORT DETAIL-ABOVE GROUND VALVES- STANDARD LIFT STATION
LS-16	LEGEND ONE-ABOVE GROUND VALVES- STANDARD LIFT STATION
LS-17	LEGEND TWO-ABOVE GROUND VALVES- STANDARD LIFT STATION
[illegible]	[illegible]

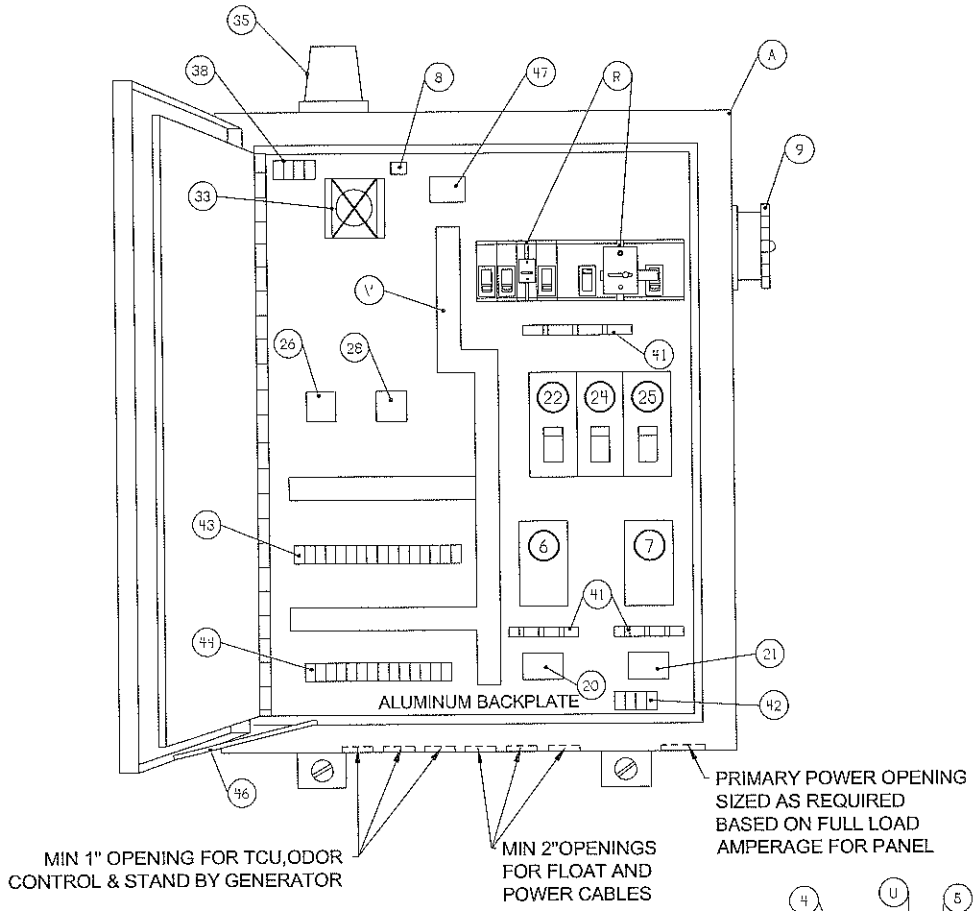

INTERIOR PANEL

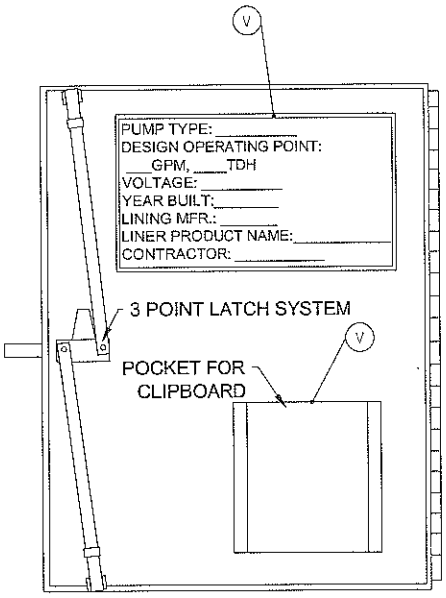

BACK OF ENCLOSURE DOOR

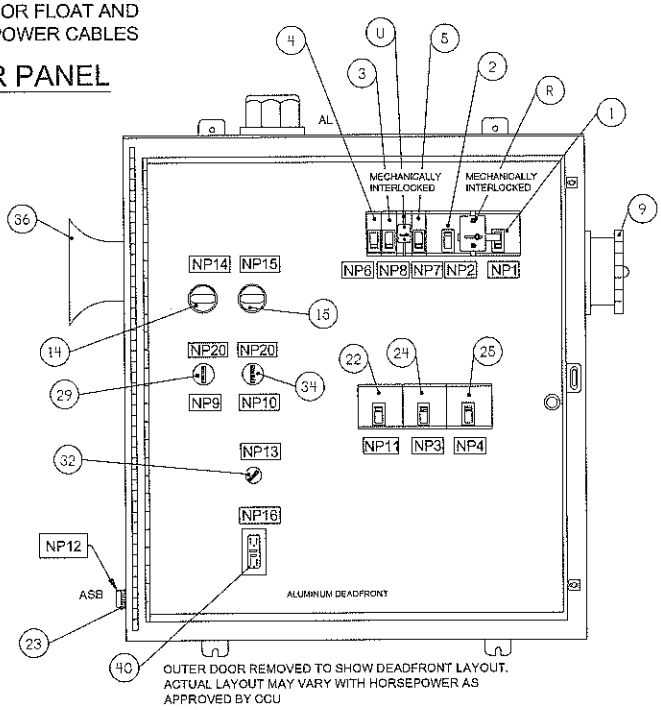

DEADFRONT DOOR

MOTOR CONTROL CENTER PANEL LAYOUT 240V-3PH

PROVIDED FOR INFORMATIONAL PURPOSES ONLY.

LS-02

Z:\Auto Cad R14\DETAILS\2012 Details\04.LIFT STATIONS\240V 3PHASE\LS-02-CPLO.dwg

Z:\Auto Cad R14\DETAILS\2012 Details\04.LIFT STATIONS\240V 3PHASE\LS-01-CPM.dwg

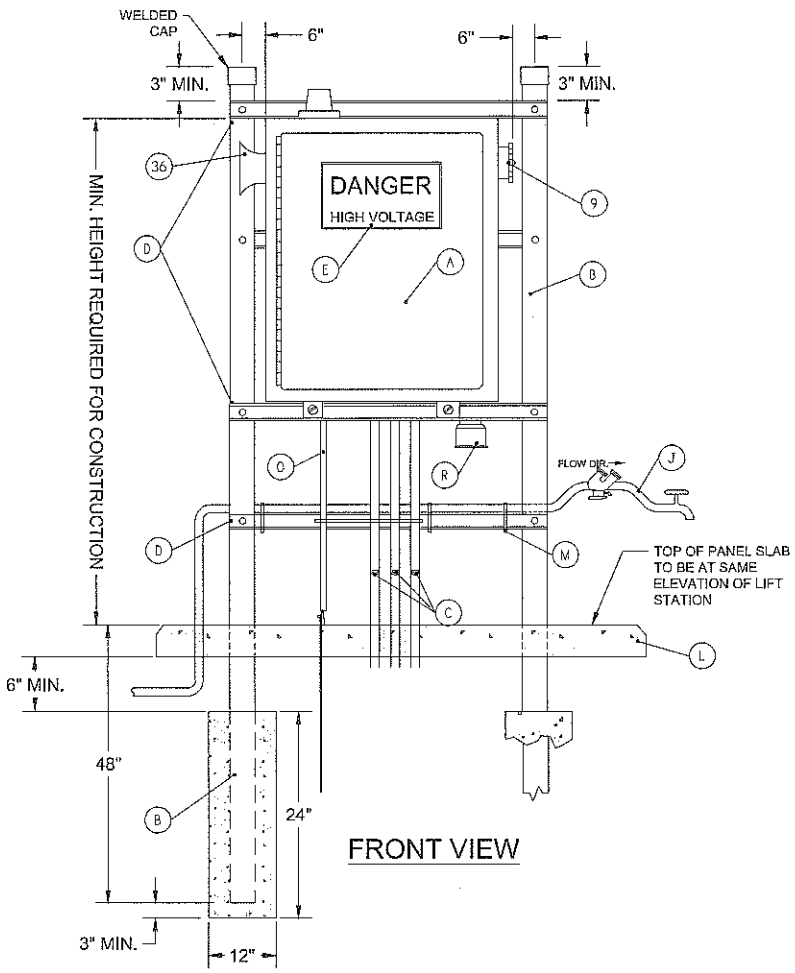

FRONT VIEW

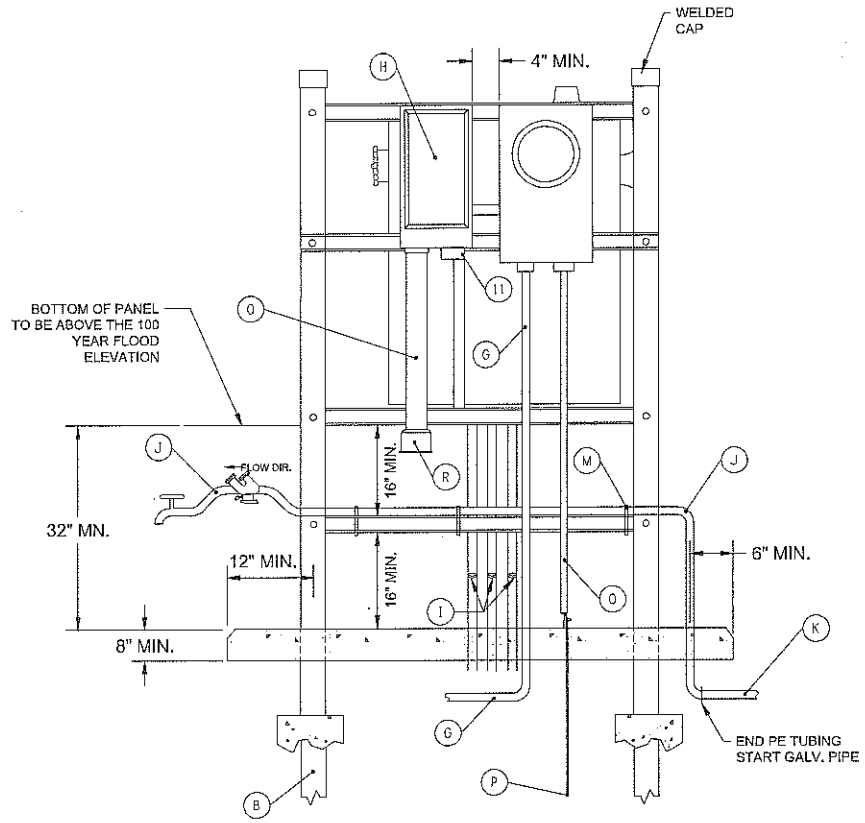

BACK VIEW

240V-3PH MOTOR CONTROL CENTER PANEL MOUNTING

PROVIDED FOR INFORMATIONAL PURPOSES ONLY.

LS-01

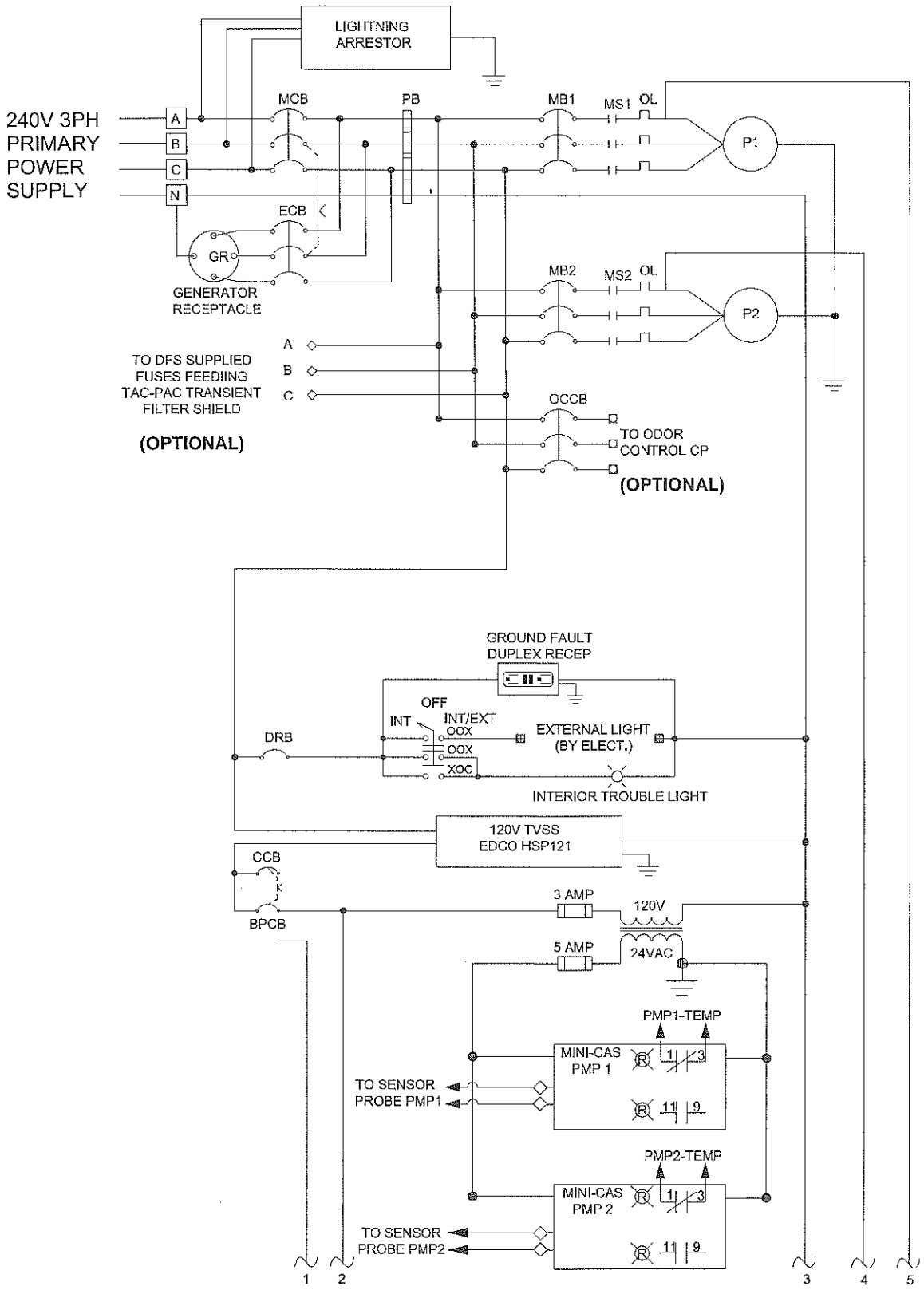

240V 3-PHASE CONTROL PANEL SCHEMATIC - 1

PROVIDED FOR INFORMATIONAL PURPOSES ONLY.

LS-03

Z:\Auto Cad R14\DETAILS\2012 Details\04.LIFT STATIONS\240V 3PHASE\LS-03-SCH-1.dwg

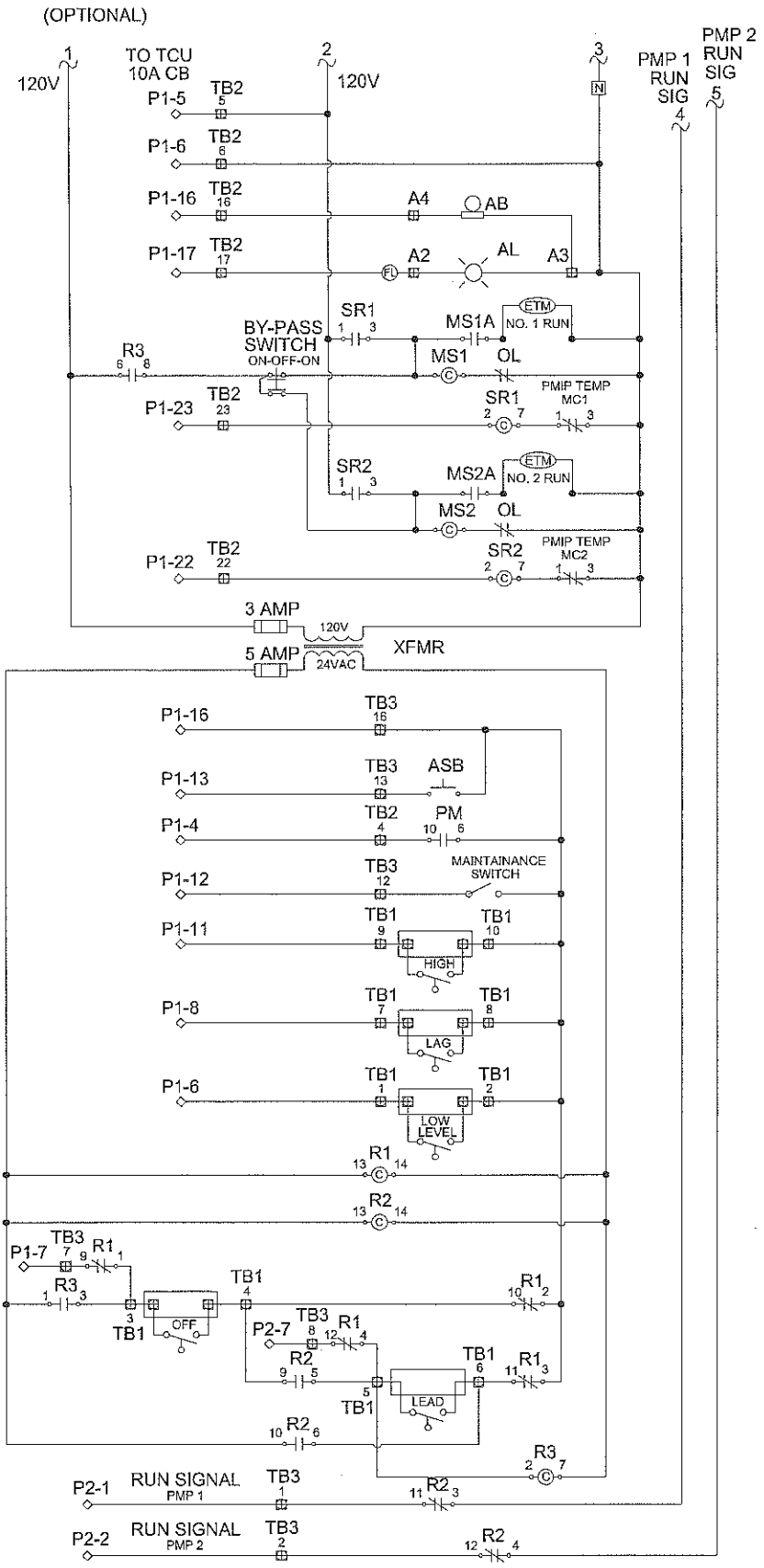

240V 3-PHASE CONTROL PANEL SCHEMATIC - 2

PROVIDED FOR INFORMATIONAL PURPOSES ONLY.

LS-04

Z:\Auto Cad R14\DETAILS\2012 Details\04.LIFT STATIONS\240V 3PHASE\LS-04-SCH-2.dwg

MOTOR CONTROL PANEL LEGEND		
AB -ALARM BELL		GR -GENERATOR RECEPTACLE
AC -AIR COMPRESSOR		HOA -HAND-OFF-AUTO SELECTOR SWITCH
AH -ALARM HORN		MB -MOTOR BREAKER
AL -ALARM LIGHT		MCB -MAIN CIRCUIT BREAKER
		MES - MAINTAINANCE ENTRY SWITCH
ASB -ALARM SILENCE BUTTON		MS -MOTOR STARTER
BPCB -BYPASS CIRCUIT BREAKER		OL -OVERLOAD HEATER
BPR - BYPASS RELAY		
CCB -CONTROL CIRCUIT BREAKER		
		PB -POWER BLOCK
DRB -DUPLEX RECEPTACLE BREAKER		
ECB -EMERGENCY CIRCUIT BREAKER		
ETM -ELAPSED TIME METER		
		SF - SEAL FAIL RELAY
		SR -STARTER RELAY
		SS - SURGE SUPPRESSOR
FL -FLASHER		TB -TERMINAL BLOCK
FR -FLOAT REGULATOR		
GFDR -GROUND FAULT DUPLEX RECEPTACLE		XFMR - TRANSFORMER

240V - 3PH MOTOR CONTROL CENTER-PANEL LEGEND

PROVIDED FOR INFORMATIONAL PURPOSES ONLY.

LS-05

Z:\Auto Cad R14\DETAILS\2012 Details\04.LIFT STATIONS\240V 3PHASE\LS-05-MTRCP.dwg

MOTOR CONTROL CENTER SPECIFICATION 240 3PH

ITEM NO.	ABBREV.	PART	QUANTITY	DESCRIPTION
1	ECB	EMERGENCY CIRCUIT BREAKER	1	SQ-D FAL ____ 3-POLE __A
2	MCB	MAIN CIRCU\T BREAKER	1	SQ-0 FAL __3-POLE __A
3	BPCB	BYPASS CONTROL CIRCUIT BREAKER	1	SQ-D FAL __1-POLE 15 AMP
4	ORB	DUPLEX RECEPTICAL BREAKER W/GFJ	1	SQ-D FAL ____ 1-POLE 15 AMP
5	CCB	CONTROL CIRCUIT BREAKER	1	SQ-D FAL __1-POLE 15 AMP
6	MS 1	MOTOR STARTER	1	SQ-D 8536_____(SIZE _____)
7	MS 2	MOTOR STARTER	1	SO-D 8536_____(SIZE_____)
8	FL	ALARM FLASHER RELAY	1	SSAC FS-126
9	GR	GENERATOR RECEPTACLE	1	RUSSELSTOLL DS2414MPOOO 480V 304 S.S. LOCKING HASP
10		NOT USED		
11	LA	LIGHTNING ARRESTER	1	SQ-D #SP3650 650 V, 3PH
12	TCU	TELEMETRY COMTROL UNIT	1	Trihedral VT SCADA
13		NOT USED		
14	ETM 1	ELAPSED TIME METER	1	ETMAC 200-10NG7 ROUND MOUNT
15	ETM 2	ELAPSED TIME METER	1	ETMAC 200-10NG7 ROUND MOUNT
16	SS	SURGE SUPPRESSOR	1	EDCO HSP - 121 RTIRM
17	CPT	CONTROL POWER TRANSFORMER		
18		NOT USED		
19	OL	OVERLOAD HEATER (IN PANEL)		SQ-D ___• ____
20	SF 1	SEAL FAIL RELAY	1	DEVERSIFIED SPM - 120 - MB- 100K
21	SF 2	SEAL FAIL RELAY	1	DEVERSIFIED SPM - 120 - MB- 100K
22	OCCB	ODOR CONTROL CIRCUIT BREAKER	1	SQ -D FAL ____ 3 POLE_____A (IF REQUIRED)
23	ASB	ALARM SILENCE BUTTON	1	SIEMENS-ALLIS 3SB02-PFB10 OR SQ-0 SKRIRH13
24	MB 1	MOTOR BREAKER PUMP #1	1	SQ-0 FAL ____ 3-POLE __A
25	MB 2	MOTOR BREAKER PUMP #2	1	SQ-0 FAL _3-POLE _A
26	SR 1	STARTER RELAY	1	DAYTON 8 - PIN, 120 VAC *50160* HZ #5Z45 W/SOCKET 3 5X852
27	BPR	BYPASS CONTROL RELAY	3	OMRON 14 PIN MY4AC1101205
28	SR 2	STARTER RELAY	1	DAYTON 8 - PIN, 120 VAC 50/60 HZ #5Z45 W/SOCKET 3 5X852
29	HOA 1	HAND-OFF-AUTO SWITCH	1	SQUARE"D" SWITCH CSS0001SKS43B CONTACT BLOCK-CT9001KA-1 LEDGEN 9001KN2GOSP
30	MES	MAINTAINANCE / ENTRY SWITCH	1	SPST SWITCH
31	FR	FLOAT REGULATOR		ROTO-FLOAT TYPE S, LIQUID LEVEL SENSOR
32	TLS	TROUBLE LIGHT SWITCH INT. & EXT.	1	SQ-D SKSF43BH2 & KA1
33	TL	TROUBLE LIGHT	1	LEVITON 9880 {40 WATT BULB)
34	HOA 2	HAND-OFF-AUTO SWITCH	1	SQUARE"D" SWITCH CSS0001SKS43B CONTACT BLOCK-CT9001 KA-1 LEDGEN 9001KN2GOSP
35	AL	ALARM LIGHT	1	INGRAM LRX-40 or OHIO ELECTRIC RL-3K
36	AH 1	ALARM HORN	1	ALA-876-N5. EDWARDS 120V
37	AH 2	ALARM HORN	1	ALA-876-NS. EDWARDS 12V
38	TB 3	TERMINAL BLOCK #3	1	SQ-D 5B364 4PT
39		NOT USED		
40	GFDR	GROUND FAULT DUPLEX RECEPTACLE	1	15A-ARROW HART OR LEVITON
41	PB	POWER BLOCK	1	BUSSMAN # 16021-3
42	TB 4	TERMINAL BLOCK #4	1	SQ-0 5B364 6PT
43	TB 2	TERMINAL BLOCK #2 (RTU)	1	SQ-0 58364 30PT (IF REQUIRED)
44	TB 1	TERMINAL BLOCK #1	1	SQ-D 5B364 12PT
45	BATT	BATTERY	1	
46		DOOR BAR WIND RESTRAINT	1	
47	NB	NEUTRAL BLOCK	1	GB-1 WEIDMULLER
48	BUAC	BATTERY BACK-UP MODULE	1	
49	MC	MOUNTING CHANNEL	4	SQ-D 9080GH112
50	XFMA	TRANSFORMER	1	MICRON, 3100LP7JK

240V - 3PH MOTOR CONTROL CENTER-PANEL LEGEND

PROVIDED FOR INFORMATIONAL PURPOSES ONLY.

LS-06

Z:\Auto Cad R14\DETAILS\2012 Details\04 LIFT STATIONS\240V 3PHASE LS-06 MRSP.dwg

LABEL SPECIFICATION

ITEM NO.	LABEL INSCRIPTION	QUANTITY	BACKGROUND COLOR
NP1	ECB	1	RED
NP2	MCB	1	BLACK
NP3	MB#1	1	BLACK
NP4	MB#2	1	BLACK
NP5			
NP6	DRB	1	BLACK
NP7	CCB	1	BLACK
NP8	BPCB	1	BLACK
NP9	PUMP#1	1	BLACK
NP10	PUMP#2	1	BLACK
NP11	OCCB	1	BLACK
NP12	ASB	1	RED
NP13	TLS	1	BLUE
NP14	ETM #1	1	BLUE
NP15	RESET	1	BLUE
NP16	GFDR	1	BLUE
NP17	No. 1 RUN	1	GREEN
NP18	No. 2 RUN	1	GREEN
NP19	ETM 2	1	BLUE
NP20	HOR	1	BLUE
NP21			

· LABELS SHALL BE LAMINATED PLASTIC WITH WHITE 1/4" HIGH ENGRAVED LETTERS.
· BACKGROUND COLOR OF LABELS SHALL BE AS INDICATED ABOVE.
· LABELS SHALL BE ATTACHED WITH PERMANENT ADHESIVE.

240V - 3PH MOTOR CONTROL CENTER-PANEL LEGEND

PROVIDED FOR INFORMATIONAL PURPOSES ONLY.

LS-07

Z:\Auto Cad R14\DETAILS\2012 Details\04-LIFT STATIONS\240V 3PHASE\LS-07-LBLSP.dwg

MOTOR CONTROL CENTER (MCC) MOUNTING NOTES

A. THE MCC ENCLOSURE SHALL HAVE A PAD LOCKABLE HASP AND A THREE POINT LATCH SYSTEM AND WIND RESTRAINER ARM THAT INCLUDES HARDWARE TO RESTRAIN THE DEAD FRONT DOOR WHEN OPENED. THE HASP AND HARDWARE SHALL BE TYPE 316 STAINLESS STEEL.

B. TWO (2) 4 INCH DIAMETER SCHEDULE 80 ALUMINUM PIPES 10 FEET LONG WITH 4 INCH WELDED ALUMINUM CAPS SHALL BE ANCHORED IN CONCRETE FROM 3 INCHES BELOW THE BOTTOM OF THE PIPE TO 12 INCHES BELOW THE FINISHED GRADE.

C. THREE (3) "EY6" EXPLOSION PROOF CLASS 1 SEAL-OFF 2 INCH DIAMETER SEAL WITH NON-HARDENING CONDUIT SEALANT AS APPROVED BY THE MANUFACTURER FOR A TEMPORARY SEAL.

D. THE ALUMINUM PIPES SHALL INCLUDE TYPE 316 STAINLESS STEEL H-1 7/8 INCH CHANNEL STRUT C/W TYPE 316 STAINLESS STEEL. DISSIMILAR METALS SHALL BE ISOLATED WITH RUBBER GASKETS.

E. PLASTIC WARNING LABEL STATING "DANGER HIGH VOLTAGE" SHALL BE INSTALLED ON THE OUTSIDE OF THE ENCLOSURE DOOR AND BE SECURED TO THE DOOR WITH ADHESIVE OR CEMENT.

F. TWO (2) INCH CONDUIT AND WIRING BETWEEN THE FPL METER CAN AND THE SAFETY DISCONNECT PANEL AND THE SAFETY DISCONNECT PANEL AND THE MCC.

G. Underground conduit and wiring between the FPL meter can and the FPL hand hole.

H. FUSED SAFETY DISCONNECT IN A NEMA 4X ENCLOSURE WITH A LOCKING PLATE. INSTALL AN EXTERNAL LIGHTING ARRESTOR. POWER FROM THE MCC SHALL EXIT THE ENCLOSURE FROM THE UNDERSIDE.

I. THREE (3) 2" CONDUIT AND WIRING BETWEEN THE MCC AND THE WETWELL. FROM THE TOP OF THE SWEEP TO THE MCC SHALL BE TYPE 316 STAINLESS STEEL AND FROM THE TOP OF THE SWEEP TO THE INSIDE OF THE WETWELL SHALL BE SCHEDULE 80 PVC.

J. ¾" GALVANIZED STEEL PIPE WITH TWO (2) 90 DEGREE BENDS TO THE BACKFLOW PREVENTION DEVICE AND THE HOSE BIB.

K. ¾" POLYETHYLENE PIPING FROM THE WATER METER AND THE WATER SERVICE GALVANIZED PIPE.

L. CONCRETE SLAB.

M. WORM DRIVE CLAMPS. (3 MINIMUM)

N. ONE (1) NUMBER 6 WIRE GROUND IN ½" SCHEDULE 80 PVC.

O. GROUND ROD.

P. THREADED RIGID TYPE 316 STAINLESS STEEL CONDUIT SIZED AS REQUIRED BY FULL LOAD AMPERAGE.

Q. CAST ALUMINUM TYPE LB FITTING WITH ALUMINUM CAP.

R. HEAVY DUTY MECHANICAL INTERLOCK FOR EMERGENCY POWER TRANSFER.

S. PANDUIT TO BE FILLED TO ONLY 50% CAPACITY.

T. IF REQUIRED, ONE (1) INCH PVC AND TYPE 316 STAINLESS STEEL CONDUIT BETWEEN THE MCC AND THE TCU CONTROL PANEL ENCLOSURE, THE AREA LIGHT, THE STAND-BY GENERATOR, AND/OR THE ODOR CONTROL IN ACCORDANCE WITH THE ENGINEERING DRAWINGS.

U. ALL INTERNAL MCC WIRING SHALL BE STRANDED WIRE AND PERMANENTLY NUMBERED.

V. PLASTIC LIFT STATION LABEL AND POCKET FOR CLIP BOARD, PROVIDED AND INSTALLED BY THE CONTRACTOR ON THE BACK OF THE MCC ENCLOSURE DOOR USING AN ADHESIVE OR CEMENT.

240V - 3PH MOTOR CONTROL CENTER-MOUNTING NOTES

PROVIDED FOR INFORMATIONAL PURPOSES ONLY.

LS-08

Z:\Auto Cad R14\DETAILS\2012 Details\04.LIFT STATIONS\240V 3PHASE\LS-08-MTRCMN.dwg

TCU FUNCTIONS					
MOD R - RIM006					
BATTERY TEST		BIAS VOLTAGE		TCU POWER	
RADIO KEY CURRENT		RADIO SIGNAL STRENGTH		INTERNAL TEMPRATURE	
MOD A - DMM002					
PUMP 1 STATUS		PUMP 2 STATUS		PHASE MONITOR BYPASS	
OFF FLOAT INPUT		LEAD FLOAT INPUT		LAG FLOAT INPUT	
HIGH FLOAT INPUT		ANY PUMP		WORKING AT L/S	
MOD B - DCM001					
STARTER 1 OUT		STARTER 2		AUXILLARY OUT	
ALARM LIGHT STATUS		ALARM HORN STSTUS		ALARM SILENCE INPUT	
STATION DISABLE		AC POWER		DC BIAS	
PHASE SEQUENCE		PROCESS			
MOD C - DCM001					
ANALOG INPUT 1		ANALOG INPUT 2		FLOAT SQUENCE	
PHASE VOLTAGE		CONFIGURATION			
MOD D - DCM001					
PUMP 1 DISABLE		PUMP 2 DISABLE		PUMP 1 OVERRIDE	
PUMP 2 OVERRIDE		PIMP 1 STARTER		PUMP2 STARTER	
PUMP 1 STOP		PUMP 2 STOP			
MOD E - ACM001					
FLOW EQUALIZATION		LOW WELL LEVEL		HIGH WELL LEVEL	
HOA 1		HOA 1		HOA 1	
HOA 2		HOA 2		HOA 2	
MOD G - DCM001					
AUX OUT OVERRIDE		ALARM LIGHT OVERRIDE		ALARM HORN OVERRIDE	
AUX OUT DISABLE		ALARM LIGHT DISABLE		ALARM HORN DISABLE	
PUMP OVERRIDE REST		ANALOG UPDATING			

240V 3 PHASE-TCU FUNCTIONS

PROVIDED FOR INFORMATIONAL PURPOSES ONLY.

LS-09

Z:\Auto Cad R14\DETAILS\2012 Details\04-LIFT STATIONS\240V 3PHASE\LS-09-TCUFNCdwg.dwg

Z:\Auto Cad R14\DETAILS\2012 Details\04.LIFT STATIONS\LS ABOVE GROUND VALVES\LS-11-AGV-PP.dwg

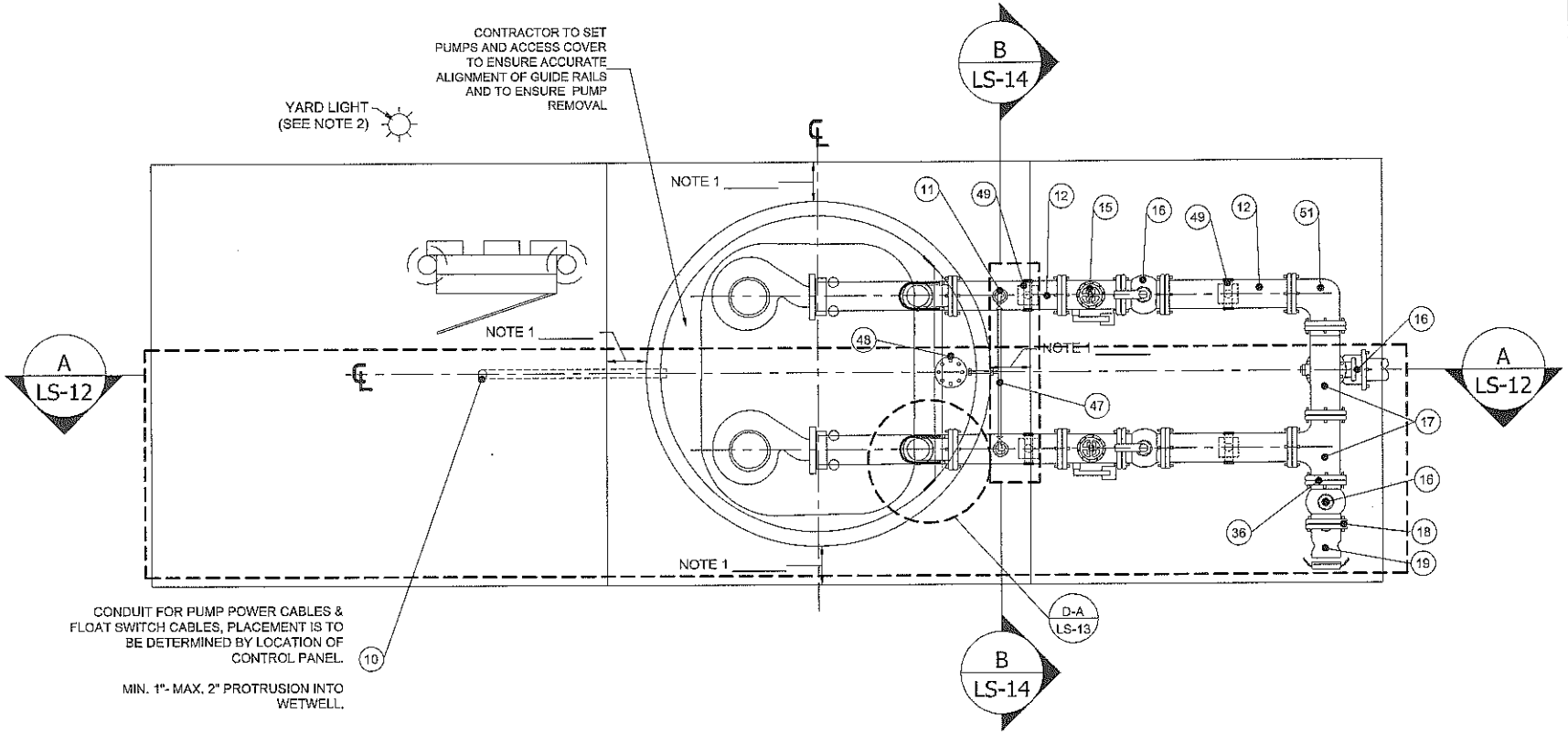

NOTES:

1. DISTANCE (12" MINIMUM) BASED ON WET WELL OUTSIDE DIAMETER.
2. YARD LIGHT AND CONDUIT TO BE INSTALLED AS SHOWN ON ENGINEERING DRAWINGS.

PIPING PLAN-ABOVE GROUND VALVES- STANDARD LIFT STATION

LS-11

PROVIDED FOR INFORMATIONAL PURPOSES ONLY.

Z:\Auto Cad R14\DETAILS\2012 Details\04-LIFT STATIONS\LS ABOVE GROUND VALVES\LS-12-AGV-XS.dwg

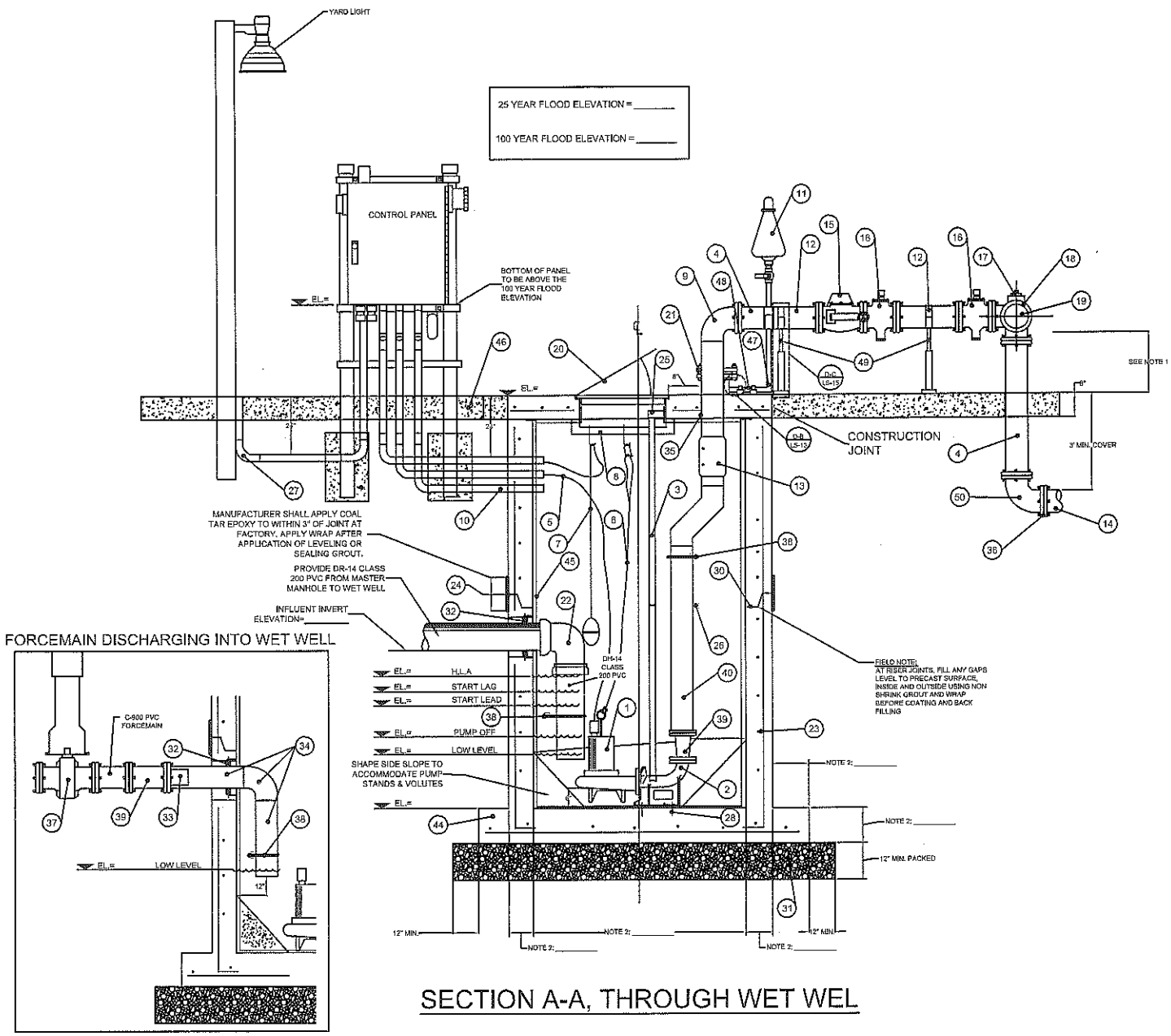

SECTION A-A, THROUGH WET WEL

NOTES:

1. MAXIMUM HEIGHT FROM BOTTOM OF PIPE TO TOP OF SLAB 24".
2. FINAL WET WELL DIMENSIONS TO BE BASED ON WET WELL ANTI-FLOTATION CALCULATIONS.
3. YARD LIGHT AND CONDUIT TO BE INSTALLED AS SHOWN ON ENGINEERING DRAWINGS.

SECTION A-A / ABOVE GROUND VALVES- STANDARD LIFT STATION

LS-12

PROVIDED FOR INFORMATIONAL PURPOSES ONLY.

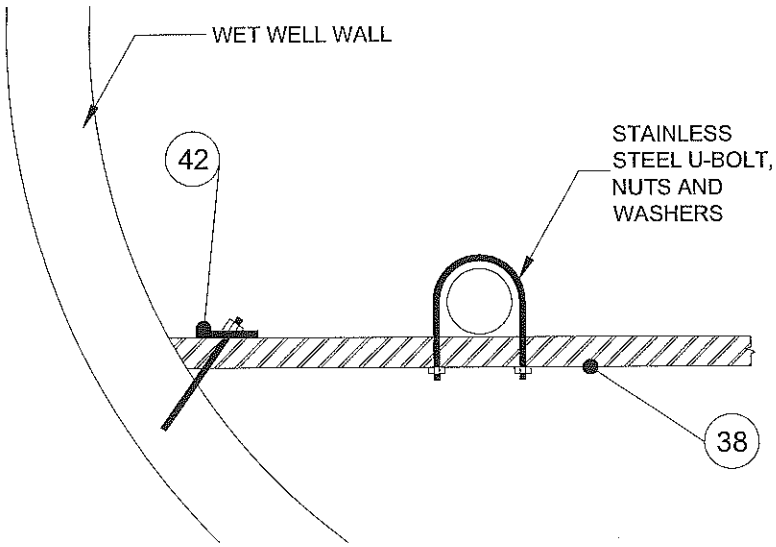

DETAIL "A"

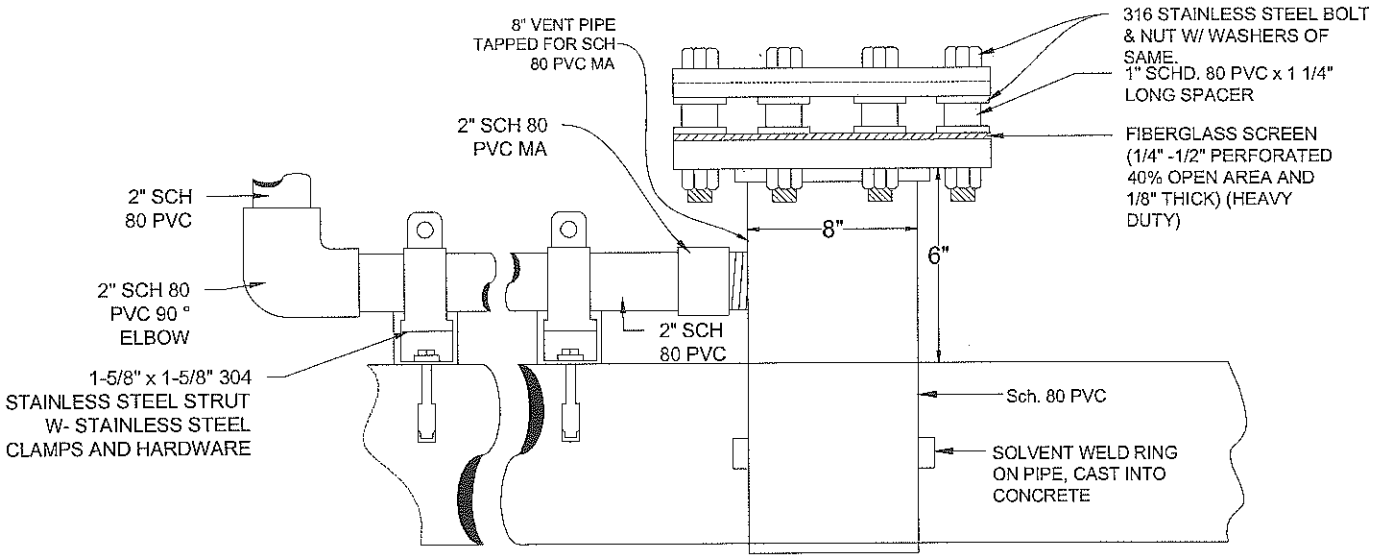

DETAIL "B"

	DETAILS A & B-ABOVE GROUND VALVES- STANDARD LIFT STATION	PROVIDED FOR INFORMATIONAL PURPOSES ONLY.
		LS-13

Z:\Auto Cad R14\DETAILS\2012 Details\04.LIFT STATIONS\LS ABOVE GROUND VALVES\LS-13-AGW-DET.dwg

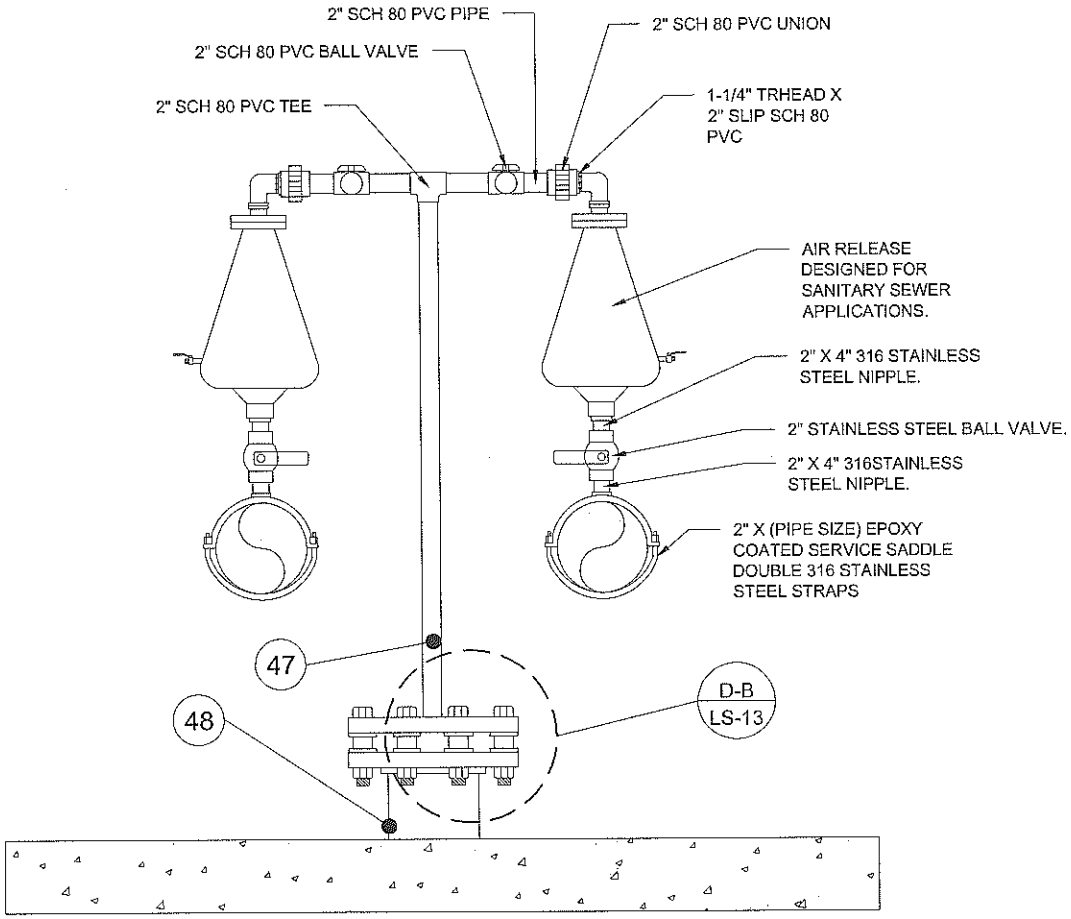

8" AND LARGER

SECTION B-B

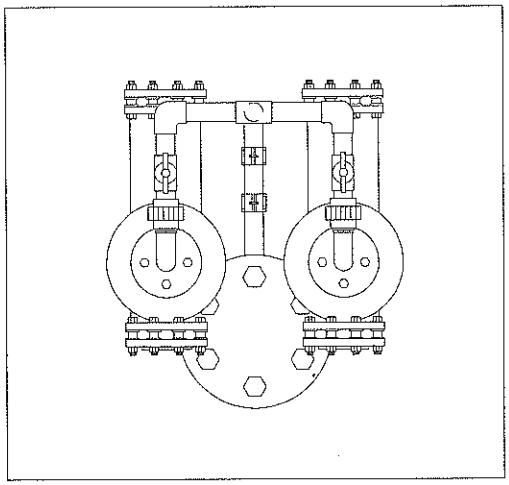

4" AND 6" PIPING

	SECTION B-B / ABOVE GROUND VALVES- STANDARD LIFT STATION	PROVIDED FOR INFORMATIONAL PURPOSES ONLY.
		LS-14

Z:\Auto Cad R14\DETAILS\2012 Details\04.LIFT STATIONS\LS ABOVE GROUND VALVES\LS-14-AGV-AR.dwg

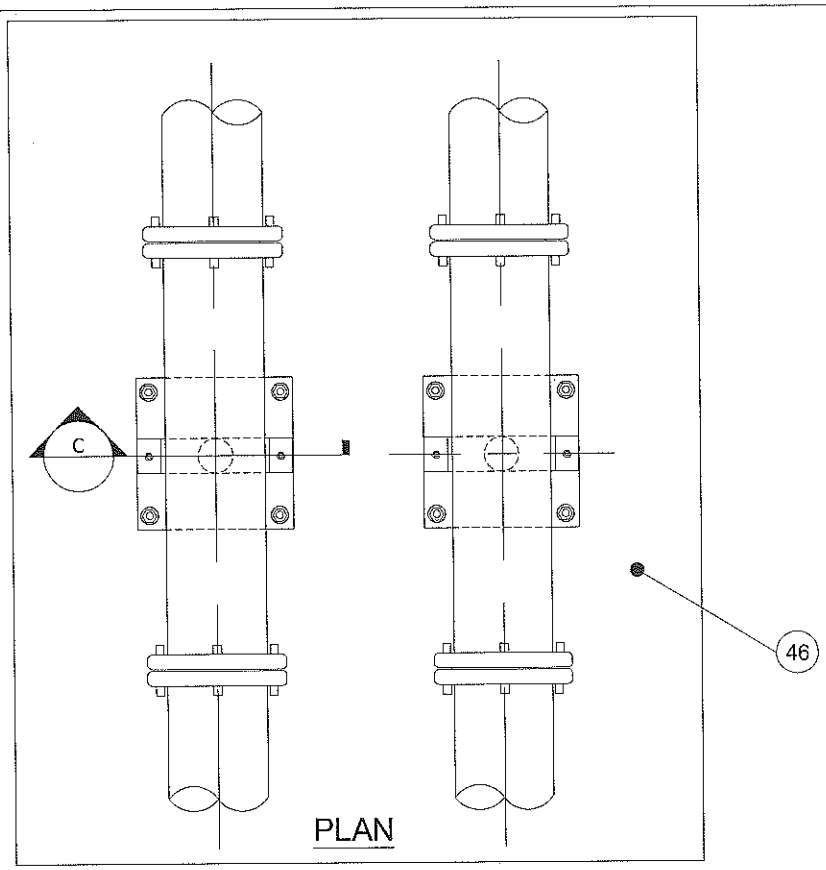

PLAN

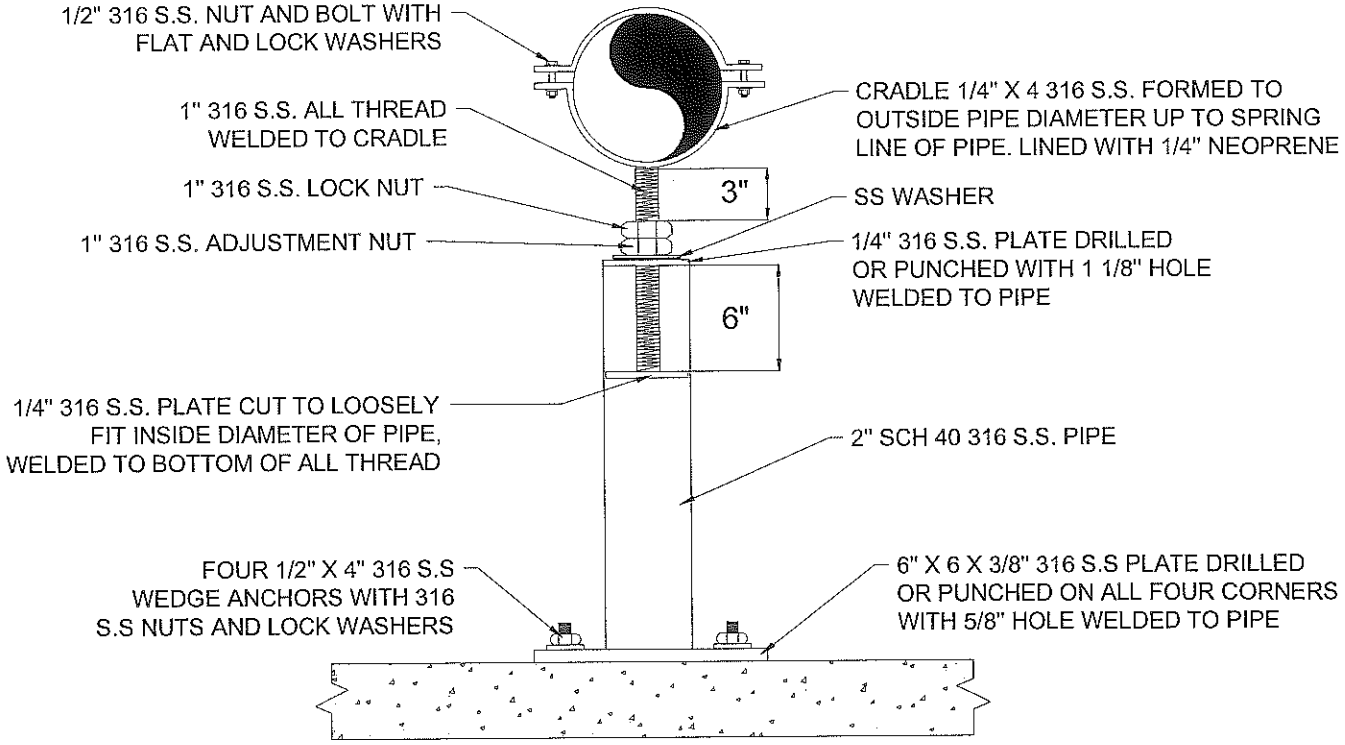

SECTION C

NOTE:
MAXIMUM HEIGHT FROM BOTTOM OF PIPE TO TOP OF SLAB 24"

DISCHARGE PIPE SUPPORT DETAIL
ABOVE GROUND VALVES
STANDARD LIFT STATION

PROVIDED FOR INFORMATIONAL PURPOSES ONLY.

LS-15

Z:\Auto Cad R14\DETAILS\2012 Details\04.LIFT STATIONS\LS ABOVE GROUND VALVES\LS-15-AGV-SD.dwg

DRAWING LEGEND

1. CENTRIFUGAL NON-CLOG SUBMERSIBLE PUMP - TYPE _____, MODEL NO._____, IMPELLER NO._____, _____ VOLTS, H.P.,_____ GPM @_____ TDH, (2 REQUIRED).
2. CCU APPROVED MANUFACTURER COMPATIBLE _____" STANDARD DISCHARGE CONNECTION (2 REQ'D). ADJUST FOR PUMP TO WETWELL BOTTOM CLEARANCE AS REQUIRED BY PUMP MANUFACTURER WITH 4000 PSI TYPE II CONCRETE.
3. _____" DIAMETER SCH 40 WELDED STAINLESS STEEL PIPE TYPE 316, MUST BE WITHIN 1/4" TOLERANCE OF FITTING INTO GUIDE RAIL BRACKETS AS PER MFG. (4 REQUIRED)
4. _____ " CLASS 53 D.I. EPOXY LINED PIPE, PLAIN END BY FLANGE END. (AS NEEDED)
5. PUMP POWER CABLE (2 REQUIRED).
6. PUMP LIFTING CHAIN (2 REQUIRED).
7. LIQUID LEVEL SENSOR, EACH SENSOR CABLE SHALL BE CONTINUOUS (NO SPLICES) AND A MINIMUM OF 40 FEET IN LENGTH (5 REQUIRED).
8. LIQUID LEVEL SENSOR CABLE HOLDER TYPE 316SS WITH PUMP LIFTING CABLE RING. FURNISH WITH NOT LESS THAN 6 PRONGS.
9. _____" D.I.P.S. SDR 11 HDPE 90 DEGREE ELBOW WITH FUSED FLANGE W/ STAINLESS STEEL BACK UP RING AT SPOOL PIECE.
10. 2" CONDUIT FOR CABLES (3 REQUIRED). FROM TOP OF SWEEP TO MCC TO BE 316 STAINLESS STEEL & FROM TOP OF SWEEP TO INSIDE OF WET WELL TO BE PVC SCH. 80. END AT WET WELL TO BE SEALED WITH DUXSEAL. CLAMP CONDUIT TO BOTTOM STRUT OF MCC. (SEE SECTION A-A OF WET WELL DETAIL.)
11. 2" FLANGED AUTOMATIC AIR-RELEASE VALVE D-020, MANUFACTURED BY A.R.I. ON LINE OR APPROVED EQUAL. WITH _____" EPOXY COATED STAINLESS STEEL STRAP SADDLE.
12. _____ " x 24" LONG FLANGE BY FLANGE DI PIPE.
13. _____" HDPE FUSION COUPLER (IF NEEDED)
14. _____"x _____" MJ REDUCER (IF NEEDED)
15. _____" MUELLER-A-2602-6-01-E193 OR M&H "QUIET CLOSING SWING CHECK" WITH WEIGHT AND LEVER.
16. _____" PLUG VALVE (3 REQ'D).
17. _____" DI TEE.
18. _____" x _____ " D.I. COMPANION FLANGE.
19. 6" COUPLER.
20. ACCESS COVER. INSTALLED PER MFG. ACTUAL HATCH SIZE TO ACCOMMODATE PUMPS (MIN. 36x48)
21. STATION VENT - (SEE DETAIL "B" SHEET LS-13).
22. _____ " PVC 90° ELBOW RESTRAINED.
23. #5 REBAR AT 12" ON CENTER EACH WAY.
24. WRAP
25. UPPER GUIDE RAIL BRACKETS (2 REQUIRED)
26. FOR GUIDE RAILS OVER 15 FT INSTALL INTERMEDIATE GUIDE RAIL BRACKETS (2 REQUIRED) (SEE DETAIL "A" SHEET LS-13)
27. 1" CONDUIT FOR CABLE FROM TOP OF SWEEP TO MCC, TO BE 316 SS; FROM TOP OF SWEEP TO BOTTOM OF SLAB TO BE SCH. 80 TO YARD LIGHT

	LEGEND ONE **ABOVE GROUND VALVES** **STANDARD LIFT STATION**	PROVIDED FOR INFORMATIONAL PURPOSES ONLY. LS-16

Z:\Auto Cad R14\DETAILS\2012 Details\04-LIFT STATIONS\LS ABOVE GROUND VALVES\LS-16-AGV-LGND1.dwg

DRAWING LEGEND CONTINUED

28. ANCHOR BOLTS 4 PER PUMP
29. _____ " CLASS 53 DI EPOXY LINED SOLID SLEEVE - RESTRAINED JOINT.
30. TONGUE AND GROOVE JOINT WITH SEAL.
31. PROVIDE 12 INCHES OF COMPACTED CRUSHED STONE OR PEA GRAVEL LEVELING COURSE. COMPACT TO STABILIZE. WET WELL SHALL BE PLACED ON UNDISTURBED SUB-BASE OR 100% COMPACTED CLEAN FILL.
32. ELASTOMERIC GASKET BOOT.
33. _____ " 316 STAINLESS STEEL INSERT
34. _____ " HDPE DIPS SDR-11 FUSED 90° ELBOW
35. "LINK SEAL" MODEL S-316 FOR D.I.P.S. / CAST OR CORE BIT DRILLED HOLE, TYPE WALL SLEEVE PIPE SUPPORTS W/ S.S. BOLTS (2).
36. ALL GASKETS SHALL BE 1/8" THICK SBR AS MANUFACTURED BY: U.S. PIPE "FLANGE - TYPE" OR AMERICAN CAST IRON PIPE "TORUSEAL".
37. _____ " MJ GATE VALVE .
38. 1-5/8"x 1-5/8" SLOTTED 12 GAUGE CHANNEL STRUT . TO BE PLACED AT 6' INTERVALS ON PIPE LONGER THAN 10 FEET (SEE DETAIL "A" SHEET LS-13). IF LESS THAN 10 FEET, PLACE AT MIDPOINT OF PIPE.
39. _____" x _____" D.I. FLANGED REDUCER (IF REQUIRED)
40. _____" D.I.P.S. SDR 11 HDPE WITH FUSED FLANGE W/ STAINLESS STEEL BACK UP RING, (USE BENDS AS NECESSARY)
41. NOT USED
42. 5/8" x 6" 316 S.S. RED HEAD WITH WASHER AND NUT. (2 REQUIRED) (SEE DETAIL "A" SHEET LS-13)
43. PRECAST CONCRETE WET WELL TOP,WITH BROOM FINISH.
44. PRECAST CONCRETE WET WELL AND BASE.
45. WET WELL LINING
46. 8" MINIMUM POURED IN PLACE CONCRETE SLAB EVEN WITH WET WELL TOP AND TO HAVE A BROOM FINISH.
47. 1" OR 2" (MATCH A.R.V. DISCHARGE) PVC SCH. 80. DISCHARGE LINE FROM A.R.V's, WITH FITTINGS. (FROM A.R.V.'S TO TOP OF WET WELL SLAB)
48. CAST PVC SCH 80 A.R.V. PIPE INTO PROPOSED SLAB, EXTEND 2" BELOW BOTTOM OF EXISTING SLAB. PROTECT FROM PLUGGING DURING LINER APPLICATION.
49. STAINLESS STEEL SUPPORT CRADLE (SEE DETAIL SHEET LS-14) (4 REQUIRED)
50. _____" x 90° EPOXY LINED MJ BEND. (RESTRAINED JOINT AND THRUST BLOCK AS REQUIRED) (2 REQUIRED)
51. _____" x 90° EPOXY LINED DI FLANGED BEND

LEGEND TWO
ABOVE GROUND VALVES
STANDARD LIFT STATION

PROVIDED FOR INFORMATIONAL PURPOSES ONLY.

LS-17

Z:\Auto Cad R14\DETAILS\2012 Details\04 LIFT STATIONS\LS ABOVE GROUND VALVES\LS-16-AGV-LGND1.dwg