S-1A	GENERAL SANITARY SEWER NOTES
S-1B	GENERAL SANITARY SEWER NOTES
S-1C	GENERAL SANITARY SEWER NOTES
S-2A	STANDARD 48" PRECAST MANHOLE FOR SEWERS 16" OR LESS IN DIA.
S-2B	STANDARD 48" PRECAST MANHOLE FOR SEWERS 16" OR LESS IN DIA.
S-2C	STD. 48" MANHOLE SHALLOW TYPE FOR SEWERS 16" OR LESS IN DIA.
S-3	TYPICAL DROP MANHOLE - OUTSIDE
S-4	CLEAN-OUT DETAIL
S-5	TYPICAL SEWER SERVICE CONNECTION DETAILS
S-6	SEWAGE AIR RELEASE VALVE ASSEMBLY WITH BOX AND COVER
S-7	SEWAGE AIR RELEASE VALVE ASSEMBLY-OFFSET
S-8	GREASE TRAP
S-9A	PUMP STATION (PLAN VIEW)
S-9B	PUMP STATION (ELEVATION VIEW)
S-9C	PUMP STATION NOTES
S-9D	CONTROL PANEL NOTES
S-10	LIFT STATION ELECTRICAL SCHEMATIC
S-11	STANDBY GENERATOR ASSEMBLY NOTES
S-12	LIFT STATION SITE PLAN

NOTES:

1. PRECAST MANHOLE SECTIONS SHALL BE MANUFACTURED IN ACCORDANCE WITH LATEST EDITIONS OF ASTM C-478 WITH 4000 P.S.I., TYPE II CEMENT.
2. PRECAST CONCRETE MANHOLE BASES SHALL HAVE A MINIMUM 28 DAY COMPRESSIVE STRENGTH OF 4000 P.S.I. AND SHALL UTILIZE TYPE II CEMENT.
3. CONCRETE PLACED IN MANHOLE INVERTS SHALL HAVE A MINIMUM 28 DAY COMPRESSIVE STRENGTH OF 4000 P.S.I. AND SHALL UTILIZE TYPE II CEMENT.
4. LIFT HOLES THROUGH PRECAST STRUCTURES ARE NOT PERMITTED.
5. ALL PIPE PENETRATIONS SHALL BE PRECAST OR CORE-DRILLED.
6. AN A-LOK TYPE COLLAR, KOR-N-SEAL, OR AN APPROVED RUBBER BOOT SHALL BE USED AT ALL PIPE PENETRATIONS.
7. "D-LOK", "AKWASTOP", "RAM-NEK" OR APPROVED EQUAL AT ALL RISER JOINTS, ½" THICK WITH WIDTH AT LEAST ½ THE WALL THICKNESS.
8. THE INTERIOR OF THE ADJUSTMENT SECTION SHALL BE PLASTERED WITH ¾" ACID RESISTANT MORTAR OVER BRICK ADJUSTMENT. ONE TO THREE COURSES OF BRICK ARE TO BE USED FOR ADJUSTMENT. APM I+I BARRIER MUST BE INSTALLED ON ALL MANHOLES BEFORE RAISING RING AND COVER TO FINAL GRADE.
9. MANHOLE COVER SHALL BE WATERTIGHT OR EQUIPPED WITH A INFLOW PROTECTOR. FRAME AND COVER SHALL BE USF#170-E, O/E; COVER WEIGHT 130 POUNDS; TOTAL WEIGHT 280 POUNDS.
10. BOTTOM BARREL AND BASE OF MANHOLE TO BE MONOLITHICALLY CAST UNLESS OTHERWISE APPROVED BY CITY.
11. SERVICE LATERALS SHALL NOT ENTER MANHOLES UNLESS SPECIFIED ON THE PLANS AND THEN MUST BE TREATED AS MAINS (SHOW ELEVATIONS, PRECAST OR CORE-DRILLED PENETRATIONS, FLOW CHANNEL CONSTRUCTION, ETC.).
12. AN OUTSIDE DROP CONNECTION SHALL BE REQUIRED FOR ALL INFLUENT LINES WHICH HAVE AN INVERT 2' OR MORE ABOVE THE MANHOLE INVERT.
13. FOR NON-STANDARD MANHOLES, THE ENGINEER OF RECORD SHALL DESIGN ALL MANHOLE REINFORCEMENT STEEL AND JOINT DETAILS AND SHALL SUBMIT CALCULATIONS TO THE CITY FOR REVIEW.
14. PRECAST OR CORE-DRILLED PENETRATION DIAMETERS SHALL BE PER MANUFACTURER SPECIFICATIONS OR AS FOLLOWS:
    10" TO 12" FOR 8" DIAMETER PIPE.
    12" TO 16" FOR 10" DIAMETER PIPE.
    16" FOR 12" DIAMETER PIPE.
15. MATERIALS OF CONSTRUCTION, PLACEMENT, AND COMPACTION REQUIREMENTS FOR BEDDING MATERIALS SHALL BE PER CITY SPECIFICATIONS.
16. FLOW CHANNELS SHALL BE CONSTRUCTED TO DIRECT INFLUENT INTO THE FLOW STREAM.
17. PROPERLY SHAPED SPILLWAYS SHALL BE CONSTRUCTED BETWEEN PIPES WITH DIFFERENT INVERT ELEVATIONS TO PROVIDE FOR SMOOTH FLOWS.
18. PRECAST MANHOLES SHALL HAVE AN ANTIMICROBIAL ADDITIVE MIXED INTO CONCRETE AT THE PRECASTER. PRECASTER SHALL INCLUDE BATCH TICKET WITH ALL DELIVERIES TO ENSURE ADDITIVE HAS BEEN USED.

TESTING AND INSPECTION OF GRAVITY SEWERS:

1. ALL NEW SANITARY SEWER LINES IN THE CITY OF GROVELAND SERVICE AREA SHALL BE CLEANED AND LAMPED, INSPECTED BY CLOSED CIRCUIT TV AND TESTED, AT THE EXPENSE OF THE OWNER/CONTRACTOR, PRIOR TO BEING ACCEPTED BY THE CITY.
2. ALL ELEMENTS OF THE SEWER SYSTEM MUST BE INSTALLED AND BE COMPLETELY FINISHED, INCLUDING MAIN SEWER LINES, LATERALS, CLEANOUTS, AND MANHOLES.
3. ALL SEWER LINES SHALL BE CLEANED PRIOR TO THE TV INSPECTION.
4. A HYDRAULIC SEWER CLEANER SHALL NOT BE USED DURING THE TV INSPECTION PROCEDURE.
5. IF LINES ARE FOUND TO BE UNCLEAN DURING THE TV INSPECTION, THE INSPECTION WILL BE TERMINATED UNTIL THE LINES ARE SATISFACTORILY CLEANED.
6. WHERE SEWERS ARE UNDER PAVED AREAS, THE AREA SHALL BE COMPACTED AND PRIMED BEFORE THE SYSTEM SHALL BE RELEASED FOR TV INSPECTION.

CLOSED CIRCUIT TELEVISION INSPECTION OF SEWER LINES
PROCEDURES FOR TELEVISING:

1. THE CITY'S PUBLIC WORKS DEPARTMENT AND THE ENGINEER OF RECORD SHALL BE GIVEN AT LEAST FORTY-EIGHT (48) HOURS NOTICE PRIOR TO THE TIME PLANNED FOR THE TV INSPECTION AND FOR CONDUCTING THE TESTING. A SPECIFIC TIME AND DATE WILL BE AGREED UPON BY THE CITY, ENGINEER OF RECORD AND CONTRACTOR.
2. NO INSPECTION SHALL COMMENCE WITHOUT THE PRESENCE OF THE CITY'S INSPECTOR, EXCEPT WHEN PRIOR ARRANGEMENTS HAVE BEEN MADE BETWEEN THE CONTRACTOR, ENGINEER OF RECORD AND THE CITY. IN THE EVENT THE INSPECTION IS PERMITTED TO START WITHOUT THE INSPECTOR'S PRESENCE, THE TELEVISION MUST MEET ALL REQUIREMENTS HEREIN.
3. ALL TV INSPECTIONS SHALL BE COMMENCED UP STREAM OF THE SYSTEM TO PREVENT FOREIGN SUBSTANCES FROM ENTERING A SECTION PREVIOUSLY TELEVISED. THE CAMERA SHALL BE STARTED FROM THE DOWN STREAM MANHOLE AND TELEVISION WILL BE DONE AGAINST THE NORMAL FLOW OF THE LINE. THIS PROCEDURE WILL ALLOW FOR THE VIEWING OF THE SERVICE LATERALS.
4. BEFORE THE CAMERA IS PLACED IN THE SEWER LINE, WATER WITH YELLOW OR ORANGE DYE SHALL BE PUT INTO THE UPSTREAM MANHOLE OF THE SECTION BEING TELEVISED. THIS WILL ENABLE THE CAMERA TO DETECT ANY CHANGES IN GRADE THAT MAY BE PRESENT IN THE SYSTEM.
5. THE TV AND VIDEO TAPE SHALL BE TURNED ON BEFORE THE CAMERA IS PLACED IN THE MANHOLE FOR INSPECTION AND SHALL NOT BE TURNED OFF UNTIL THE CAMERA IS REMOVED FROM THE MANHOLE. THE CAMERA SHALL BE MOVED THROUGH THE LINE UNDER THE CONTROL OF THE TV CAMERA OPERATOR. THE CAMERA SHALL BE DRAWN THROUGH THE LINE AT A RATE NOT TO EXCEED THIRTY (30) FEET PER MINUTE AND SHALL STOP AT ALL SERVICE CONNECTIONS IN THE LINE.
6. A VIDEO TAPE SHALL BE MADE OF THE ENTIRE SYSTEM BEING TELEVISED. THIS SHALL BECOME THE PROPERTY OF THE CITY UPON COMPLETION OF THE TV INSPECTION (NOT A COPY). THE TAPE (S) SHALL BE LABELED TO INCLUDE THE PROJECT NAME, DATE OF INSPECTION AND LINE SECTIONS ACCORDING TO CONSTRUCTION PLANS CONTAINED ON EACH TAPE. A WRITTEN REPORT SHALL ACCOMPANY THE TAPE (S).
7. IN THE EVENT THAT THE TELEVISING OF THE LINES REVEALS PROBLEMS (I.E. BELLIES, LATERAL DEFLECTION, ETC), IT MAY ALSO BE NECESSARY, AT THE DISCRETION OF THE CITY, TO REQUIRE AN APPROVED 9-ARM DEFLECTION MANDREL TO BE PULLED THROUGH THE SEWER TO ENSURE THAT THE LINE IS WITHIN ACCEPTABLE SLOPES AND THAT DEFLECTION DOES NOT EXCEED 5% OF THE AVERAGE INSIDE DIAMETER, AS ESTABLISHED BY ASTM STANDARDS. ANY PIPE FOUND TO BE OUT OF COMPLIANCE WITH THESE SPECIFICATIONS, OR NOT MEETING THE REQUIREMENTS OF THE CITY IS TO BE REMOVED AND REPLACED AT THE EXPENSE OF THE OWNER/CONTRACTOR.

TELEVISION EQIPMENT MIMIMUM REQUIREMENTS:

1. THE CLOSED CIRCUIT TV CAMERA SHALL PRODUCE A CLEAR COLOR PICTURE ON THE MONITOR AND ON THE VIDEO TAPES. THE CAMERA SHALL BE ABLE TO SHOW DETAIL TO THE POINT THAT ALL JOINTS AND ANY DEFECTS MAY BE READILY SEEN AT THE TIME OF THE INSPECTION. THE CAMERA SHALL HAVE THE ABILITY TO VIEW IN THE 360 DEGREE PATTERN. IF THE CAMERA CANNOT VIEW 360 DEGREES, THE CONTRACTOR MUST HAVE THE ABILITY TO VIEW SERVICE CONNECTIONS SEPARATELY WITH A CAMERA FOR THIS PURPOSE TO INSPECT ANY SERVICE CONNECTION THE CITY REQUESTS.
2. AN ELECTRONIC DATAVIEW SHALL BE USED DURING THE TV INSPECTION WHICH PROJECTS THE FOLLOWING:
   A. DATE OF INSPECTION.
   B. MANHOLE NUMBER OF SEWER LINE BEING INSPECTED.
   C. FOOTAGE OF SEWER LINE DURING INSPECTION.
3. THE VIDEO RECORDER SHALL PRODUCE A NO NOISE STILL PICTURE, AND PROVIDE BOTH AUDIO AND VIDEO DURING THE INSPECTION.
4. A MEASURING DEVICE, APPROVED BY THE CITY TO CHECK THE GRADE OF THE PIPE DURING THE INSPECTION, SHALL BE REQUIRED ON ANY DISPUTED AREAS AND THESE WILL BE RE-TELEVISED.
5. AUDIO OF THE INSPECTION SHALL BE SIMULTANEOUSLY RECORDED ON THE VIDEO TAPE. THE AUDIO SHALL CONSIST OF ORDINARY DESCRIPTION AND COMMENTARY.

TESTING:

1. SANITARY SEWERS SHALL BE TESTED IN SECTIONS. TESTING SHALL NOT PROCEED UNTIL ALL FACILITIES ARE IN PLACE AND ALL ASSOCIATED CONCRETE IS CURED. ALL PIPING SHALL BE THOROUGHLY CLEANED PRIOR TO TESTING TO CLEAR THE LINES OF ALL FOREIGN MATTER.
2. WHERE THE PIPE IS INSTALLED IN CONDITIONS WHERE THE GROUNDWATER LEVEL IS LESS THAN TWO FEET ABOVE THE HIGHEST POINT IN THE LINE, THE CONTRACTOR WILL UTILIZE LOW-PRESSURE AIR TESTING IN ACCORDANCE WITH UNI-BELL PVC PIPE ASSOCIATION, UNI-B6-98, "RECOMMENDED PRACTICE FOR LOW-PRESSURE AIR TESTING OF INSTALLED SEWER PIPE", LATEST REVISIONS.
3. WHERE GROUNDWATER IS AT LEAST TWO FEET ABOVE THE LOWEST POINT IN THE LINE, INFILTRATION TESTING SHALL BE USED. INFILTRATION SHALL NOT EXCEED 300 GALLONS PER DAY PER INCH OF DIAMETER PER MILE AS MEASURED BETWEEN MANHOLES. TESTING SHALL PROCEED FOR A CONTINUOUS PERIOD OF TWO (2) HOURS, WITH INFILTRATION AMOUNTS MEASURED BY METHODS APPROVED BY THE PUBLIC WORKS DEPARTMENTS. PIEZOMETERS OR OTHER CITY-APPROVED METHODS SHALL BE USED TO DETERMINE THE GROUNDWATER LEVEL.
4. SHOULD ANY TEST FAIL, NECESSARY REPAIRS SHALL BE ACCOMPLISHED BY THE CONTRACTOR, AND THE TEST REPEATED UNTIL THE ESTABLISHED LIMITS ARE SATISFIED. ANY REPAIRS SHALL BE PERFORMED UNDER THE SUPERVISION OF THE CITY FORCES AND BY METHODS RECEIVING PRIOR APPROVAL BY THE CITY.

REQUIREMENTS FOR SEWER SYSTEM ACCCEPTANCE BY THE CITY:

1. THE CONTRACTOR SHALL REPLACE, RE-TEST AND RE-TELEVISE ALL LINES EXCEEDING THE MAXIMUM ALLOWABLE DEFLECTIONS LISTED ABOVE.
2. ANY SECTIONS REQUIRING REPAIRS DUE TO PIPE FRACTURES OR POOR GRADE SHALL ALSO BE RE-TESTED AND RE-TELEVISED WITHIN THE SAME GUIDELINES AFTER THE REPAIR WORK IS COMPLETED.
3. ANY SECTION OF PVC PIPE WITH MORE THAN 5% DEFLECTION (REDUCTION IN INSIDE DIA.) SHALL NOT BE ACCEPTED.

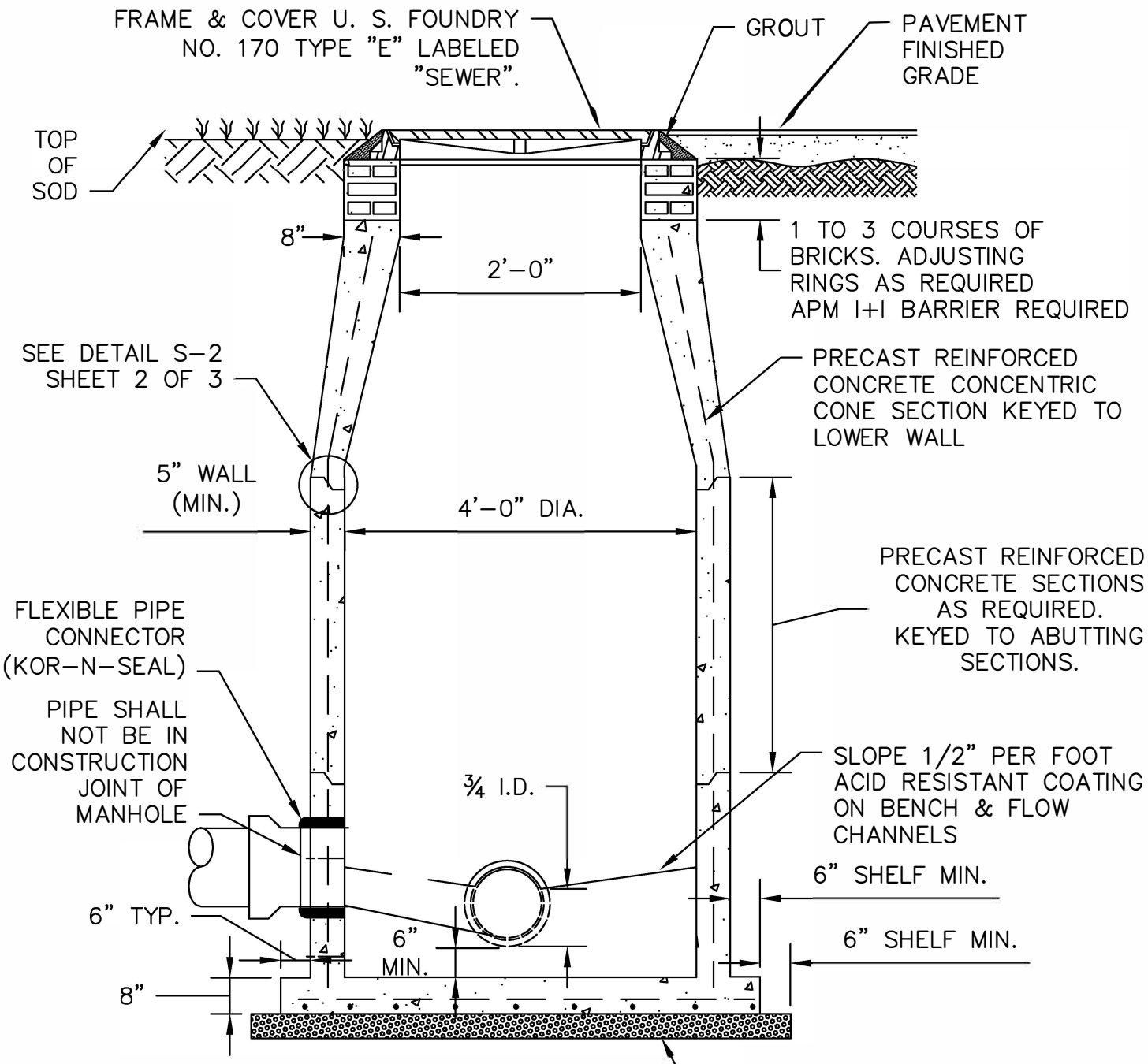

SECTION VIEW

NOTE:

1. ALL STANDARD MANHOLE NOTES APPLY. REFER TO EXHIBIT NO. S-1. DETAIL APPLIES TO MANHOLES WITH DEPTHS OF 6' TO 15'.
2. 11" WIDE EXTERNAL HEAT SHRINK WRAP

CITY OF GROVELAND STANDARD DETAILS: SANITARY SEWER

CITY OF GROVELAND ESTABLISHED 1922	STANDARD 48" PRECAST MANHOLE FOR SEWERS 16" OR LESS IN DIA.	REVISED AUGUST 13, 2018 SCALE: N.T.S. S-2A

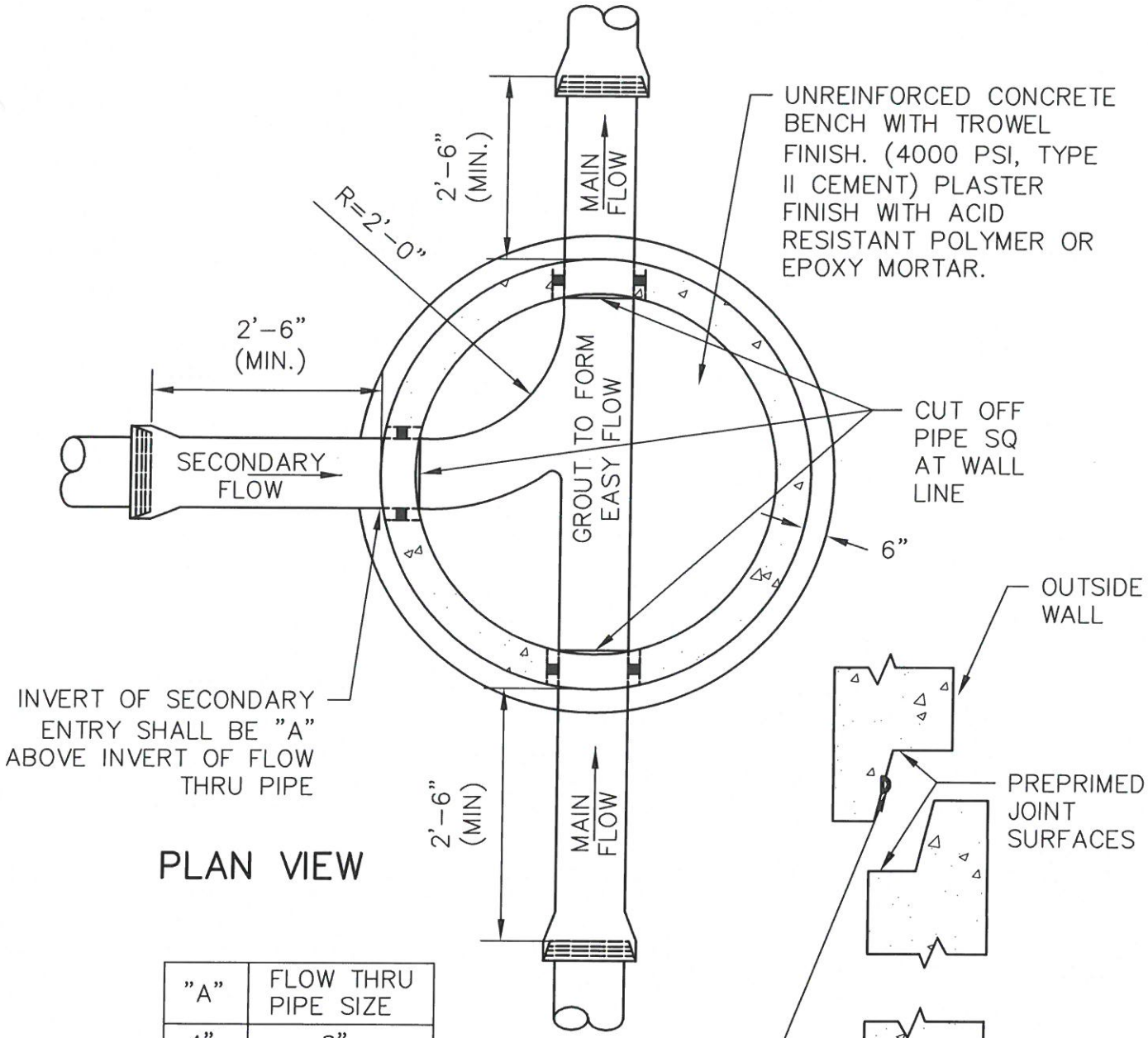

PLAN VIEW

"A"	FLOW THRU PIPE SIZE
4"	8"
5"	10"
6"	12"
8"	16"

JOINT DETAIL

NOTE:

1. ALL STANDARD MANHOLE NOTES APPLY. REFER TO EXHIBIT NO. S-1. DETAIL APPLIES TO MANHOLES WITH DEPTHS OF 6' TO 15'.

CITY OF GROVELAND STANDARD DETAILS: SANITARY SEWER

CITY OF GROVELAND ESTABLISHED 1922

METZGER & WILLARD, INC.
Civil • Environmental Engineers • Surveyors
8600 Hidden River Parkway, Suite 550
Tampa, Florida 33637 (813) 977-6005

STANDARD 48" PRECAST MANHOLE FOR SEWERS 16" OR LESS IN DIA.

DATE: JULY 7, 2008
SCALE: N.T.S.

S-2B

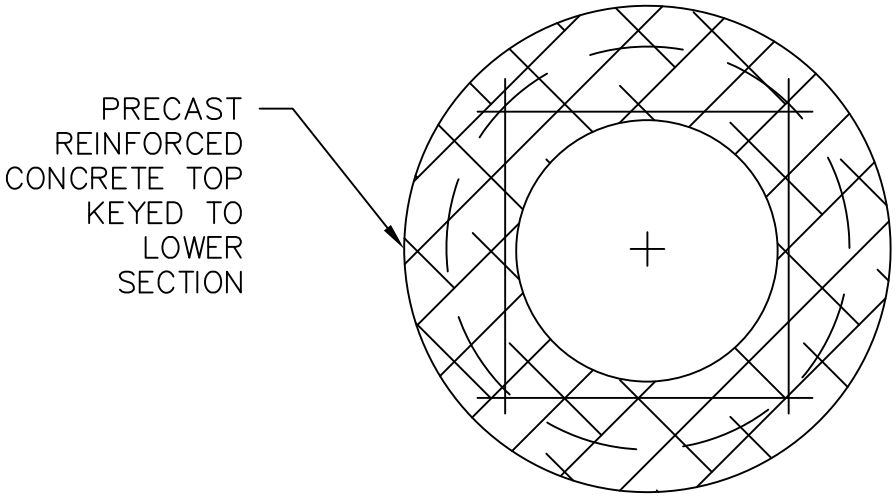

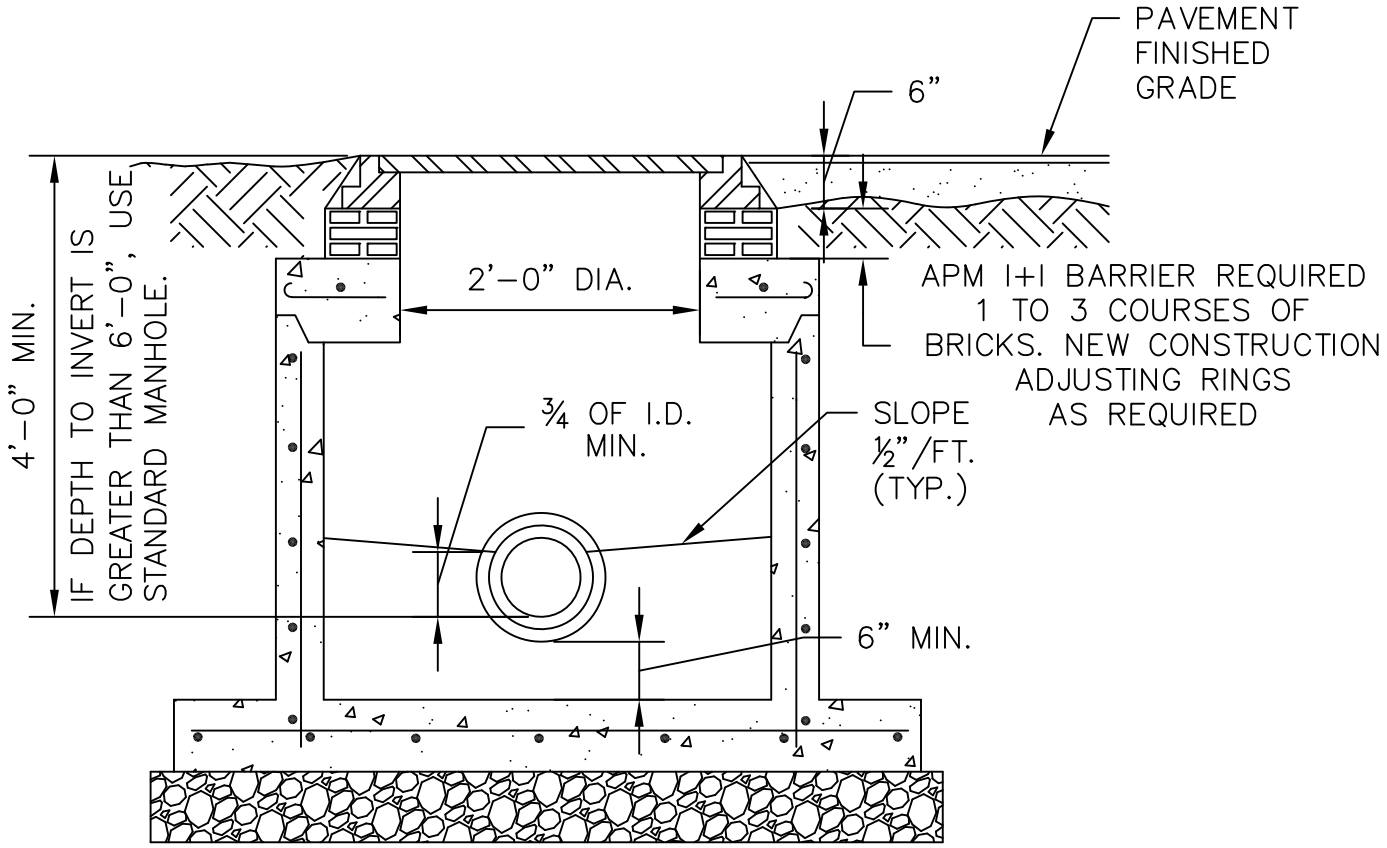

SECTION VIEW

NOTE:

1. ALL STANDARD MANHOLE NOTES AND DETAILS APPLY.

CITY OF GROVELAND STANDARD DETAILS: SANITARY SEWER

STD 48" MANHOLE
SHALLOW TYPE FOR SEWER
16" OR LESS IN DIA.

REVISED AUGUST 13, 2018
SCALE: N.T.S.

S-2C

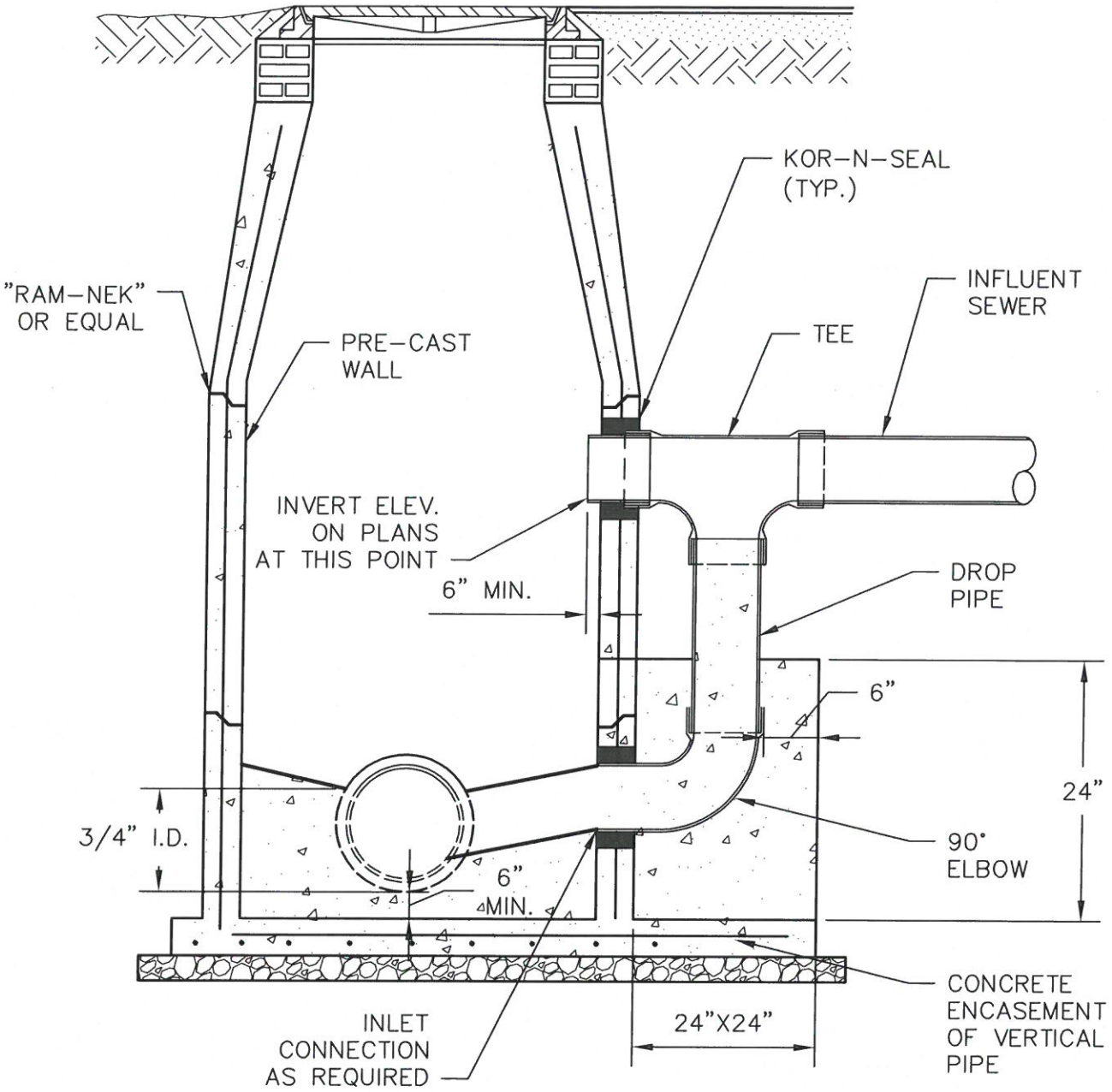

SECTION VIEW

NOTE: ALL STANDARD MANHOLE NOTES AND DETAILS APPLY. SEE S-1.

CITY OF GROVELAND STANDARD DETAILS: SANITARY SEWER

CITY OF GROVELAND ESTABLISHED 1922

METZGER & WILLARD, INC.
Civil • Environmental Engineers • Surveyors
8600 Hidden River Parkway, Suite 550
Tampa, Florida 33637 (813) 977-6005

TYPICAL DROP MANHOLE – OUTSIDE

DATE: JULY 7, 2008
SCALE: N.T.S.

S-3

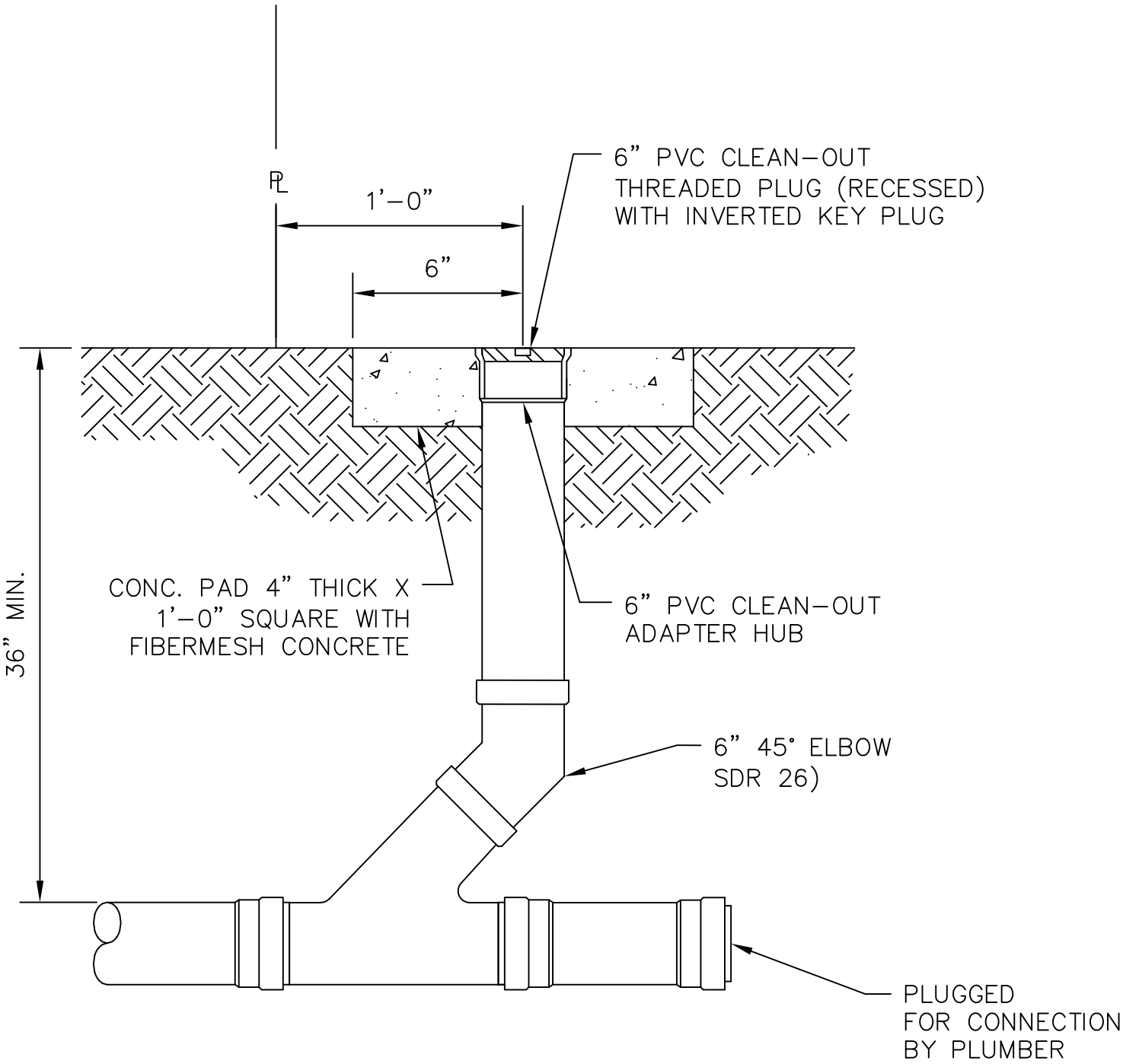

NOTES:

1. ALL PIPING AND FITTINGS TO BE PVC DR 26.

CITY OF GROVELAND STANDARD DETAILS: SANITARY SEWER

CITY OF GROVELAND ESTABLISHED 1922	CLEAN-OUT DETAIL	REVISED AUGUST 13, 2018 SCALE: N.T.S. S-4

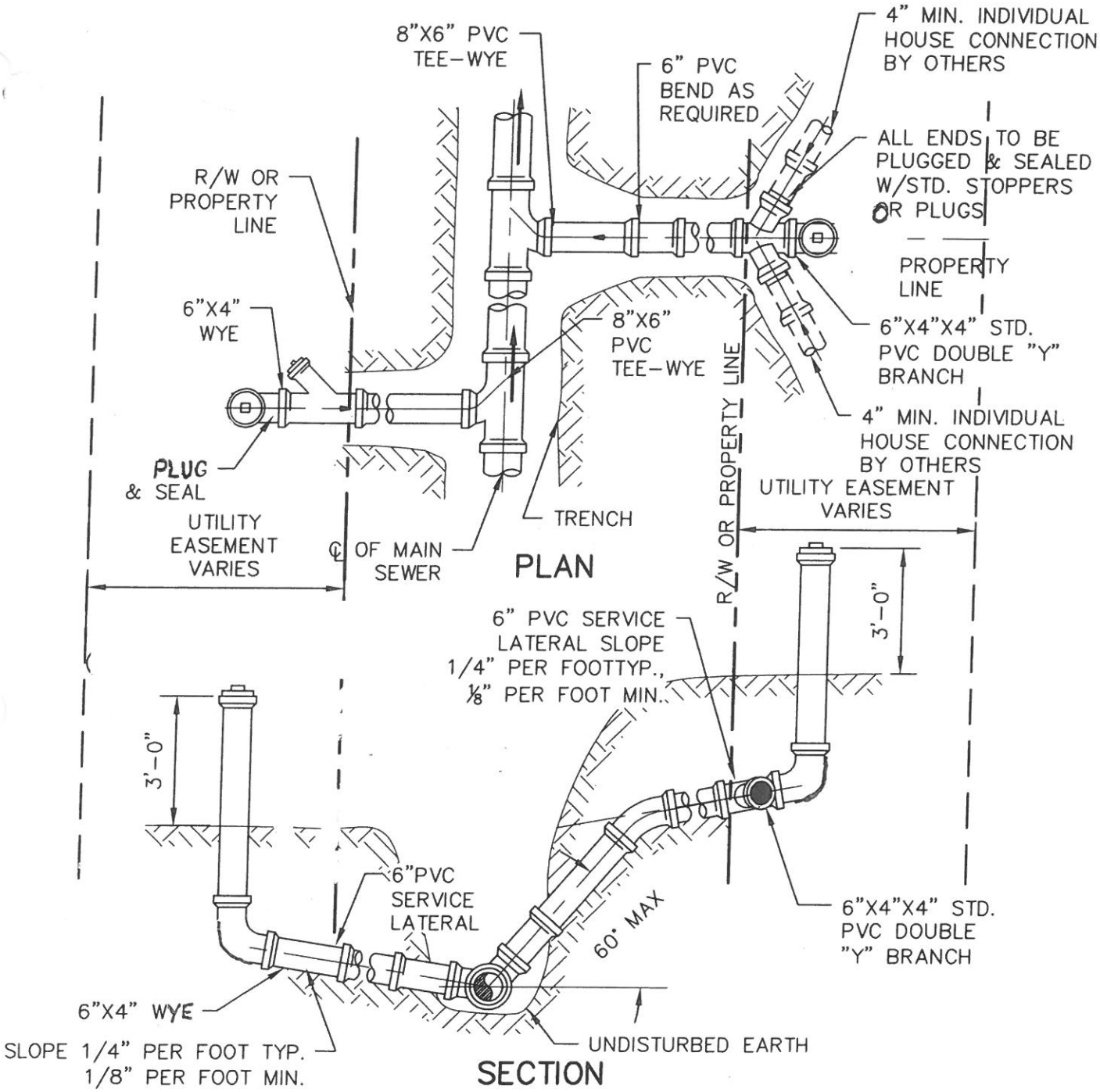

SINGLE SERVICE CONNECTION DOUBLE SERVICE CONNECTION

1. SERVICE LATERALS SHALL TERMINATE 2' INSIDE U.E. AT PROPERTY LINE AT A DEPTH OF 3 FEET, PLUGGED WATERTIGHT
2. THE MINIMUM DIAMETER OF ALL SERVICE LATERALS SHALL BE 6 INCHES.
3. CONNECTION TO CITY LATERAL SHALL BE MADE WITH A CLEANOUT.

CITY OF GROVELAND STANDARD DETAILS: SANITARY SEWER

CITY OF GROVELAND ESTABLISHED 1922

METZGER & WILLARD, INC.
Civil • Environmental Engineers • Surveyors
8600 Hidden River Parkway, Suite 550
Tampa, Florida 33637 (813) 977-6005

TYPICAL SEWER SERVICE CONNECTION DETAILS

DATE: JULY 7, 2008
SCALE: N.T.S.

S-5

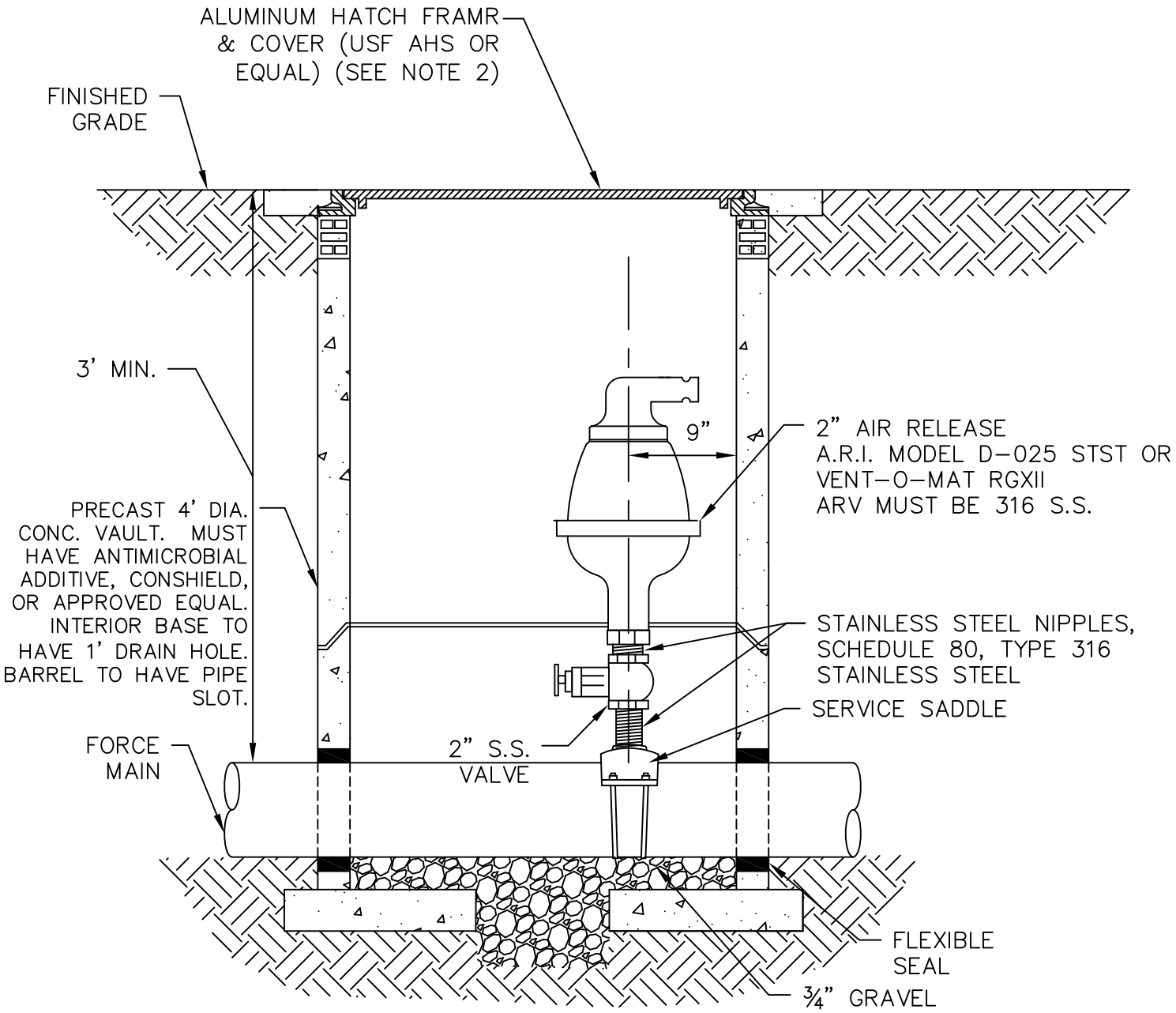

NOTES:

1. ADJUST VERTICAL ALIGNMENT OF PROPOSED FORCE MAIN SO THAT HIGH POINT IS MINIMUM 3' BELOW FINISHED GRADE.
2. WITHIN PAVEMENT AND SHOULDER AREAS, FRAME AND COVER SHALL BE TRAFFIC BEARING.

CITY OF GROVELAND STANDARD DETAILS: SANITARY SEWER

CITY OF GROVELAND ESTABLISHED 1922	SEWAGE AIR RELEASE VALVE ASSEMBLY WITH BOX AND COVER	REVISED AUGUST 13, 2018 SCALE: N.T.S. S-6

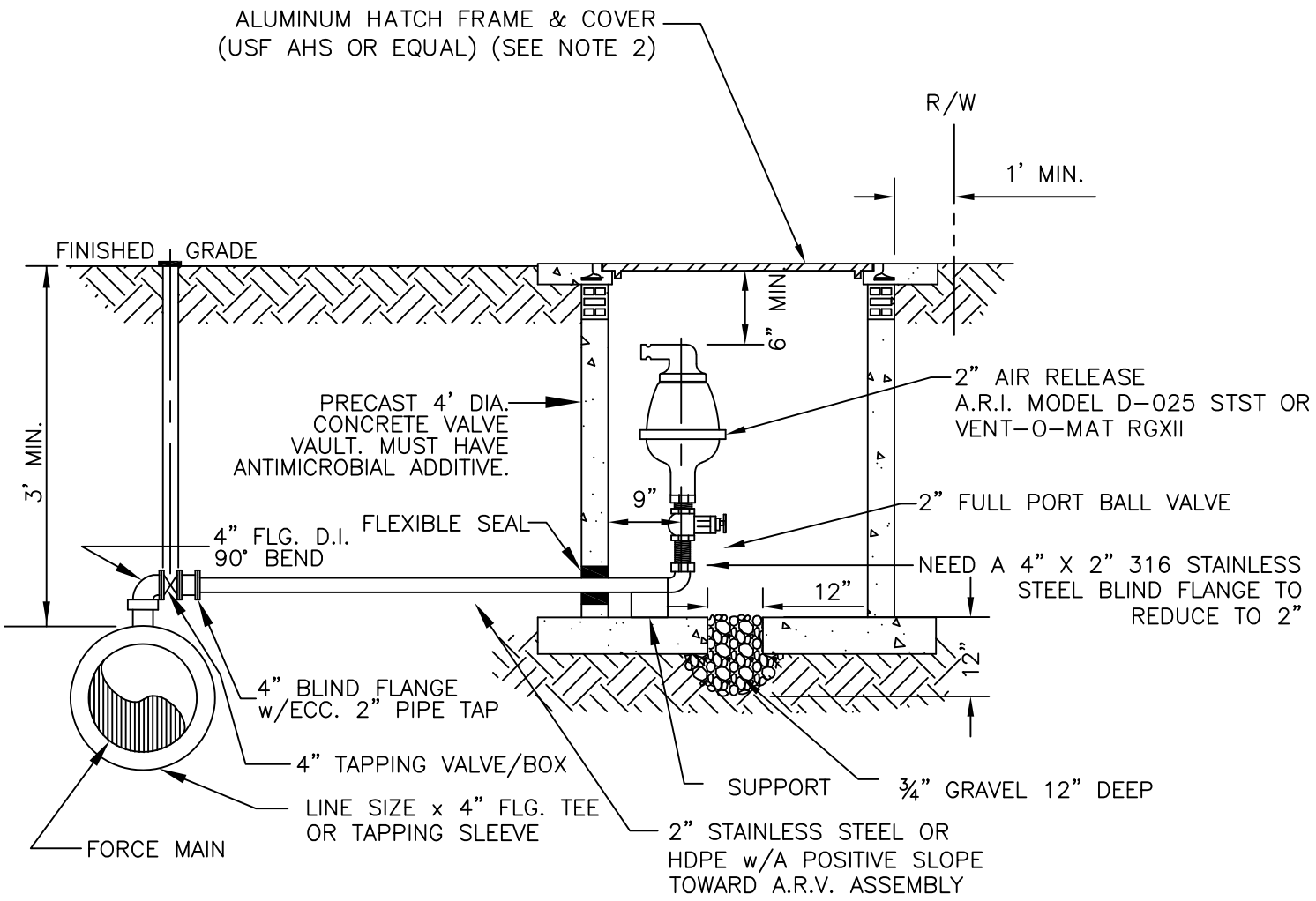

NOTES:

1. ADJUST VERTICAL ALIGNMENT OF PROPOSED FORCE MAIN SO THAT HIGH POINT IS MINIMUM 3' BELOW FINISHED GRADE.
2. WITHIN PAVEMENT AND SHOULDER AREAS, FRAME AND COVER SHALL BE TRAFFIC BEARING.

CITY OF GROVELAND STANDARD DETAILS: SANITARY SEWER

CITY OF GROVELAND ESTABLISHED 1922	SEWAGE AIR RELEASE VALVE ASSEMBLY–OFFSET	REVISED AUGUST 13, 2018 SCALE: N.T.S. S–7

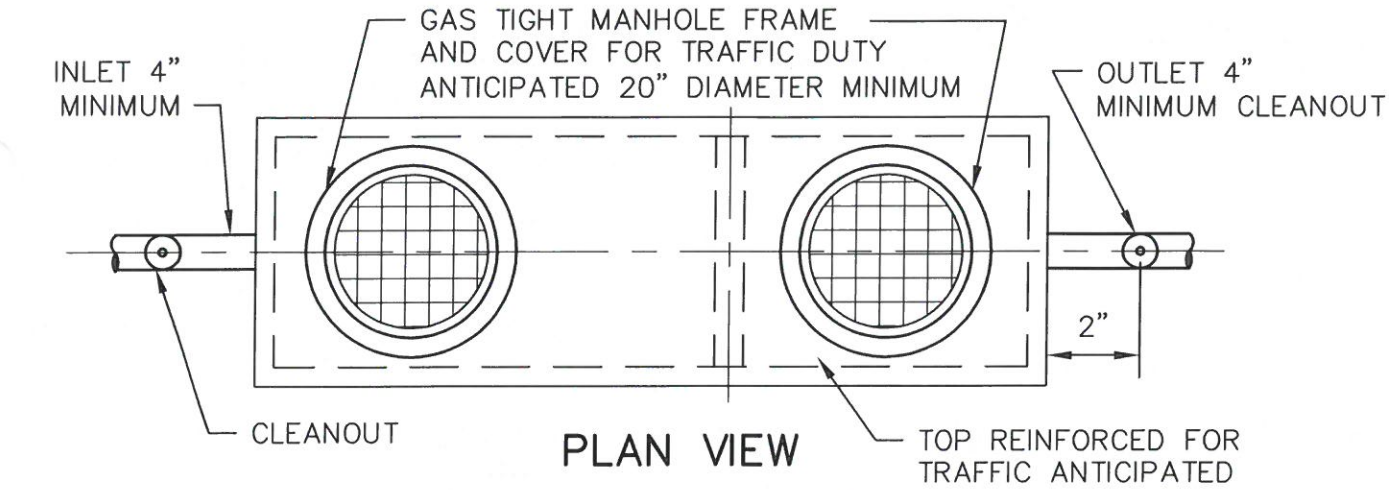

PLAN VIEW

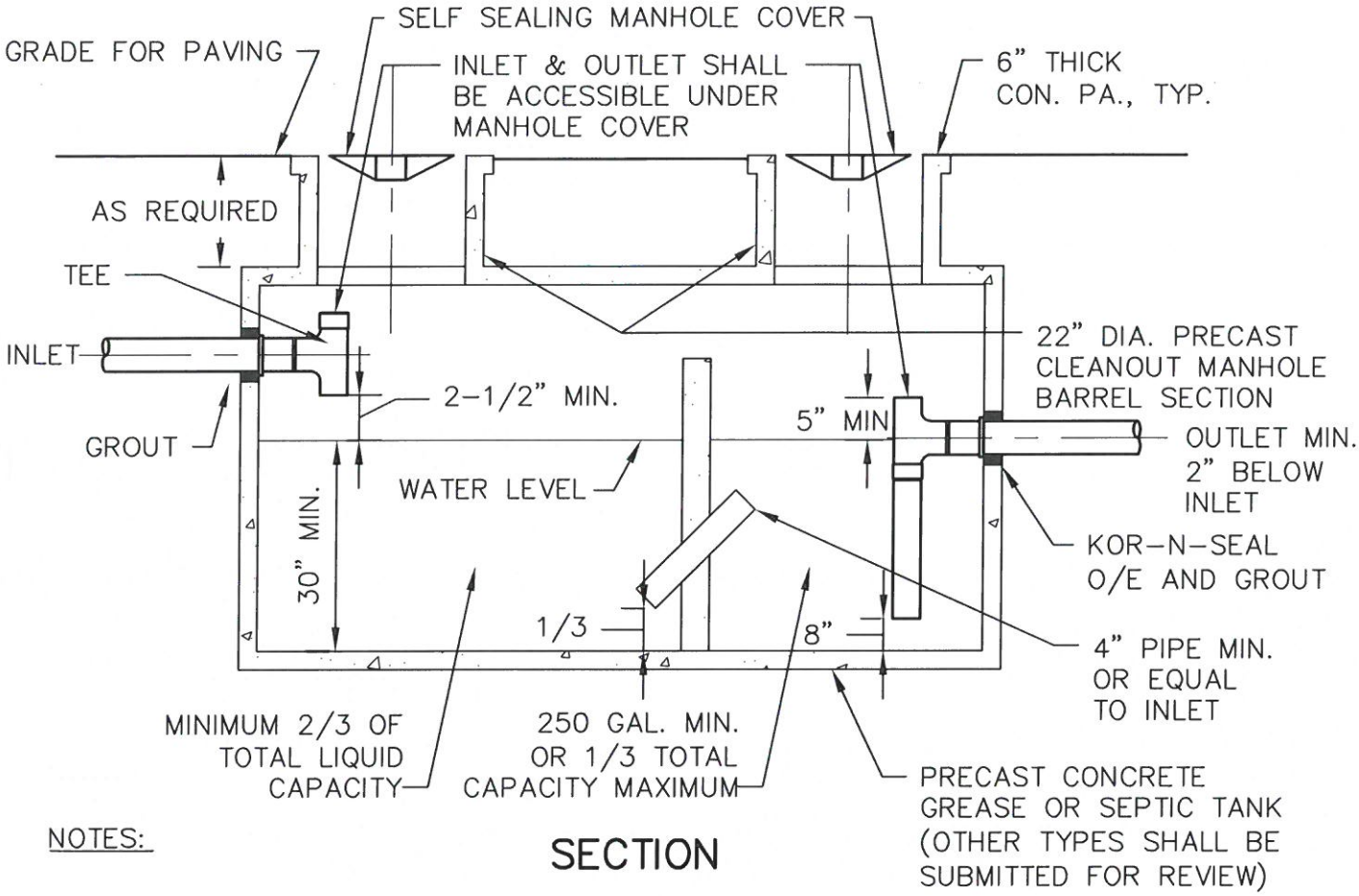

SECTION

NOTES:

1. STRUCTURAL DESIGN OF GREASE TRAP SHALL BE IN ACCORDANCE WITH CHAPTER 10d-5 OF FLORIDA ADMINISTRATIVE CODES.
2. ACCESS FOR MONITORING THE INLET AND OUTLET PIPE FITTINGS OR BAFFLES SHALL BE PROVIDED FROM MANHOLES. CLEANOUTS SHALL BE INSTALLED BEFORE THE FIRST GREASE INTERCEPTOR AND WITHIN TWO FEET AFTER THE LAST INTERCEPTOR IN THE SERIES.
3. GREASE INTERCEPTOR (OR INTERCEPTORS) SHALL BE DESIGNED TO PRODUCE A CLARIFIED EFFLUENT ACCEPTABLE TO THE CITY OF GROVELAND STANDARDS.

CITY OF GROVELAND STANDARD DETAILS: SANITARY SEWER

CITY OF GROVELAND ESTABLISHED 1922

METZGER & WILLARD, INC.
Civil • Environmental Engineers • Surveyors
8600 Hidden River Parkway, Suite 550
Tampa, Florida 33637 (813) 977-6005

GREASE TRAP

DATE: JULY 7, 2008
SCALE: N.T.S.

S-8

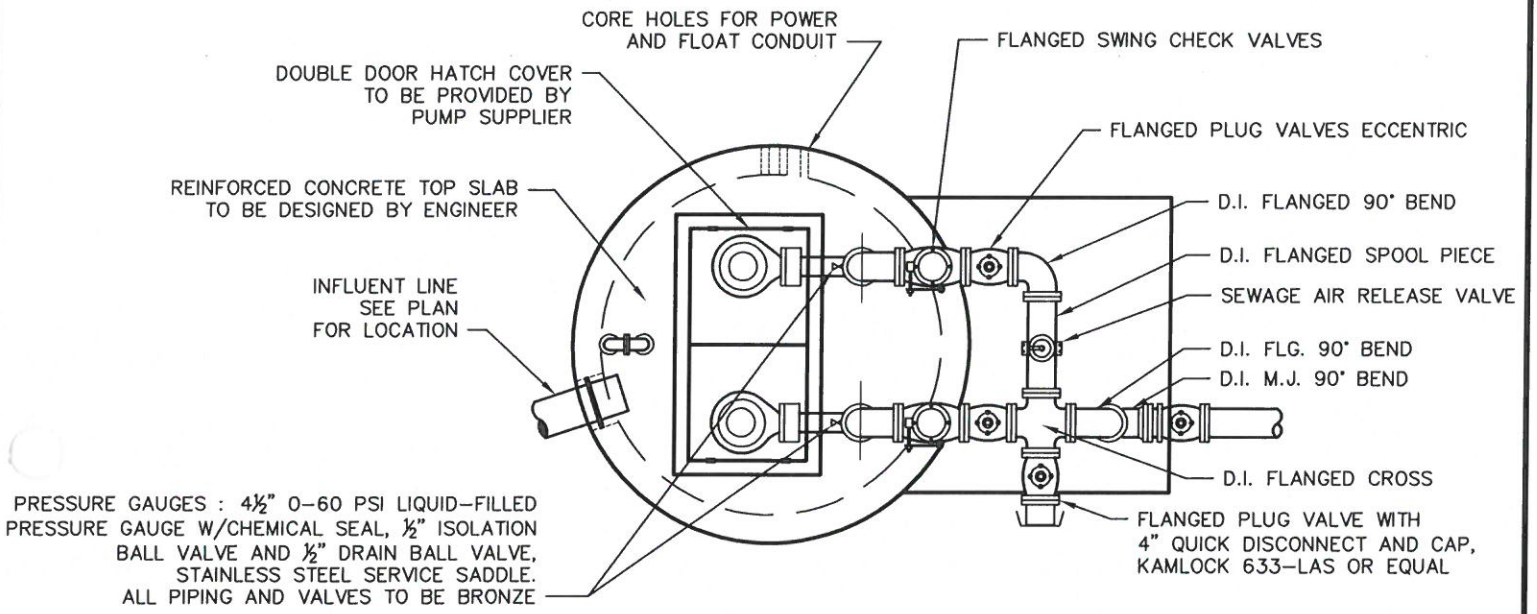

CITY OF GROVELAND STANDARD DETAILS: SANITARY SEWER

CITY OF GROVELAND ESTABLISHED 1922

METZGER & WILLARD, INC.
Civil • Environmental Engineers • Surveyors
8600 Hidden River Parkway, Suite 550
Tampa, Florida 33637 (813) 977–6005

PUMP STATION (PLAN VIEW)

DATE: JULY 7, 2008
SCALE: N.T.S.

S–9A

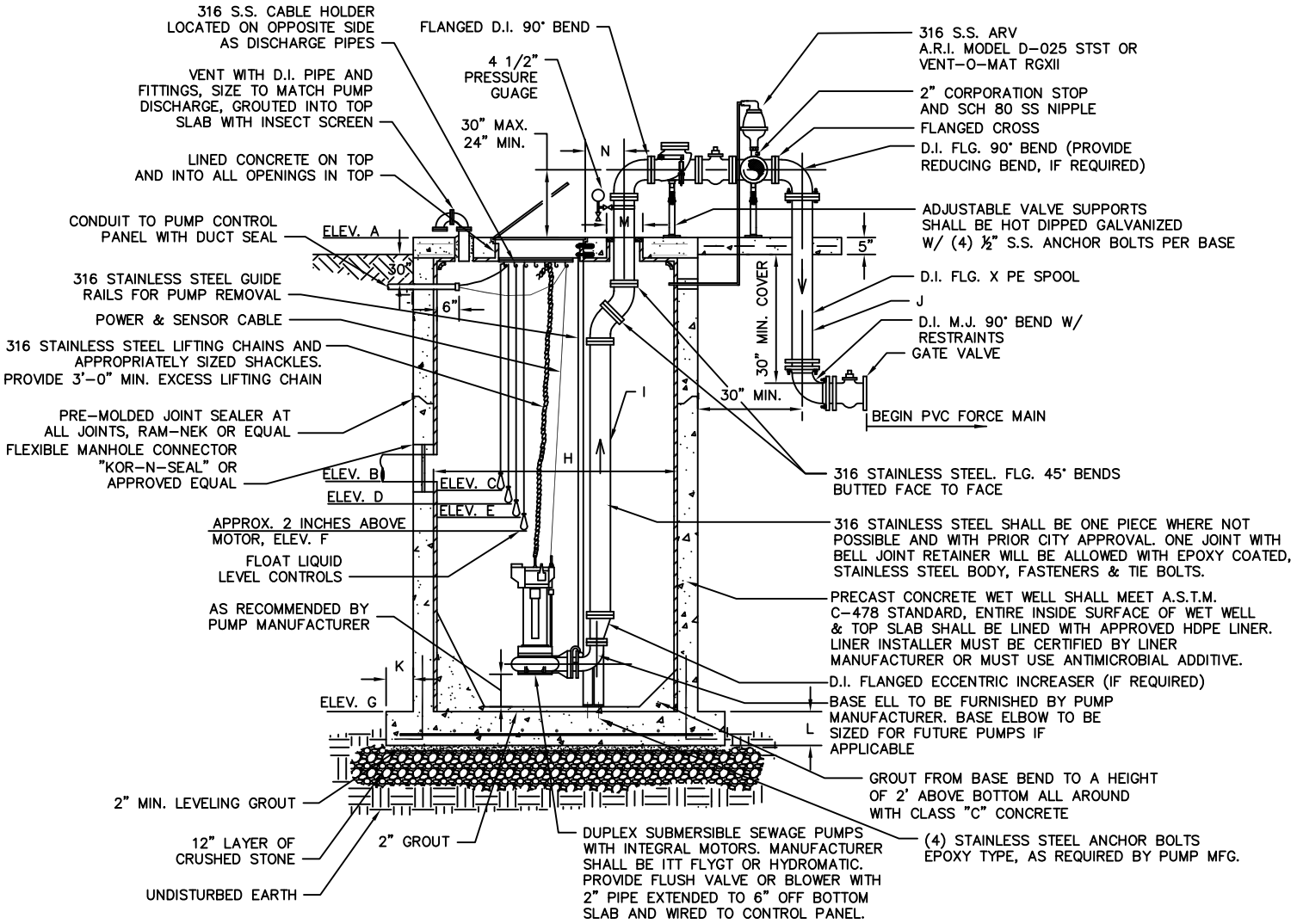

NOTES:

1. PRECAST CONCRETE STRUCTURE, INCLUDING TOP SLAB, SIDE WALLS AND BOTTOM SLAB TO MEET ASTM C-478. CERTIFICATION BY FLA. REGISTERED PROFESSIONAL ENGINEER TO BE PROVIDED BY MANUFACTURING COMPANY.
2. THE LIQUID LEVEL AT THE LIFT STATION SHALL BE SENSED BY MAINTENANCE FREE LOOP POWERED SUBMERSIBLE LEVEL TRANSDUCER SYSTEM THAT USES RELIABLE HYDROSTATIC HEAD PRESSURE SENSING PRINCIPLE TO PROVIDE AN ACCURATE AND RELIABLE PROPORTIONAL 4-20 mA SIGNAL REPRESENTING LEVEL/PRESSIRE

SCHEDULE OF ELEVATIONS:

PUMP STATION STREET ADDRESS	TOP SLAB	INFLUENT	HWL ALARM	LAG PUMP ON	LEAD PUMP ON	BOTH PUMPS OFF	BOTTOM	WET WELL DIA.	DISCHARGE PIPE DIA.	DISCHARGE F.M. DIA.	BOT. SLAB OVERHANG	BOT. SLAB THICKNESS	PIPE HOLE DIAMETER	HATCH EDGE TO ℄ PIPES
	A	B	C	D	E	F	G	H	I	J	K	L	M	N
		1)												
		2)												
		3)												

CITY OF GROVELAND STANDARD DETAILS: SANITARY SEWER

PUMP STATION
(ELEVATION VIEW)

REVISED AUGUST 13, 2018
SCALE: N.T.S.

S-9B

PUMP STATION NOTES:

1. BACKFILL AROUND WETWELL IN 12" LIFTS COMPACTING TO A MINIMUM OF 95% MODIFIED PROCTOR.

2. ALL LOCATIONS WHERE PIPES ENTER OR LEAVE THE WET WELL SHALL BE MADE WATERTIGHT WITH LINK SEAL CLOSURES SELECTED FOR THE PROPER SEALING RANGE.

3. INSTALL PUMP BASE ELLS, GUIDE RAILS, AND DISCHARGE PIPING PLUMB, LEVEL, AND SQUARE.

4. INSTALL BENCH FOR PUMP BASE ELL, IF NECESSARY, PER MANUFACTURER'S APPROVED SHOP DRAWINGS.

5. ALL HARDWARE, BOLTING & FASTENERS SHALL BE 316 STAINLESS STEEL.

6. COAT ALL METALS THAT ARE NOT STAINLESS STEEL AND ARE LOCATED IN THE WETWELL WITH 10 MILS (DRY FILM THICKNESS) OF BLACK, HIGH-SOLIDS EPOXY. (TNEMEC SERIES 69 HI-BUILD EPOXYLINE II OR AN EQUIVALENT PRODUCT. COATING SYSTEM SHALL BE INSTALLED IN ACCORDANCE WITH MANUFACTURER'S RECOMMENDATION AND SHALL NOT BE IMMERSED UNTIL FULL CURE IS ACHIEVED.

7. COAT ALL ALUMINUM SURFACES IN CONTACT WITH CONCRETE WITH BITUMINOUS COATING PRIOR TO INSTALLATION.

8. PUMP BASE ELLS, PUMP ANCHOR BOLTS, UPPER AND INTERMEDIATE GUIDE RAIL BRACKETS, GUIDE RAILS, CABLE HANGER, PUMP LIFTING CABLES, CONTROL PANEL & FLOAT SWITCHES SHALL BE PROVIDED BY PUMP SUPPLIER.

9. INSTALL INTERMEDIATE GUIDE RAIL BRACKETS AS REQUIRED BY PUMP MANUFACTURER OR, AT MINIMUM, WHEN GUIDE RAILS EXCEED 20'-0" IN LENGTH.

10. DUCTILE IRON PIPE SHALL COMPLY WITH AWWA C115 AND SHALL HAVE A PROTECTO 401 INTERIOR LINING. STAINLESS STEEL PIPE AND FITTINGS ARE REQUIRED INSIDE WET WELL.

11. DUCTILE IRON FITTINGS SHALL COMPLY WITH AWWA C110 OR C153 WITH AN AWWA C116 OR PROTECTO 401 INTERIOR LINING. STAINLESS STEEL PIPE AND FITTINGS ARE REQUIRED INSIDE WET WELL.

12. ORIENTATION OF PUMPS AND ACCESS HATCH SHALL BE IN ACCORDANCE WITH MANUFACTURER'S REQUIREMENTS FOR PUMPS FURNISHED.

13. PROVIDE AUTOMATIC FLUSH VALVES OR AN APPROVED EQUIVALENT PRODUCT TO RESUSPEND SOLIDS IN THE WETWELL UPON PUMP ACTIVATION. AIR MIXING SYSTEMS WITH APPROPRIATE CONTROLS MAY BE ACCEPTABLE ON A CASE BY CASE BASIS.

14. MOUND UP DIRT AROUND WETWELL TO 4" BELOW TOP ELEV. TO PROVIDE AESTHETICALLY PLEASING APPEARANCE. SLOPE OF MOUNDED DIRT SHALL BE 4:1 MAX OUT TO EXISTING GRADE. PROVIDE ALL FILL NECESSARY. PLACE ROCK AROUND WETWELL TO PERIMETER OF FENCE.

15. BASE AND FIRST RISER UNIT OF WETWELL TO BE CAST MONOLITHIC.

16. PAINT EXTERIOR PIPE VALVES AND FITTINGS WITH AN ALIPHATIC, ACRYLIC POLYURETHANE SYSTEM, COLOR SAFETY GREEN, TNEMEC SERIES 74 OR AN EQUIVALENT PRODUCT. COMPLY WITH ALL MANUFACTURER'S RECOMMENDATIONS.

17. PROVIDE 6' HIGH FENCE WITH DOUBLE 8' SWING GATES. MATERIAL TO BE APPROVED BY THE DIRECTOR OF PUBLIC WORKS. CHAIN LINK FENCE IS NOT ACCEPTABLE.

18. PROVIDE ¾-INCH WATER SERVICE, REDUCED PRESSURE PRINCIPAL BACKFLOW PREVENTER AND HOSE BIBB.

CONTROL PANEL NOTES

1. A NEMA 3R STAINLESS STEEL CONTROL PANEL WITH A THREE POINT LATCH AND DEAD FRONT DOOR FOR CONTROLS SHALL BE PROVIDED FOR EACH SET OF PUMPS. THE PANEL SHALL BE DESIGNED AND BUILT TO PROVIDE THE NECESSARY COMPONENTS TO SAFELY RUN AND CONTROL THE PUMPS. THE PANEL SHALL INCLUDE THE ALARM LIGHT AND ALARM HORN.

2. PROPERLY SIZED HEAVY-DUTY, AIR CIRCUIT BREAKERS SHALL BE PROVIDED FOR EACH OF THE FOLLOWING: MAIN BREAKER, TVSS BREAKER, CONTROL BREAKER, AND DUPLEX RECEPTACLE BREAKER. PROVIDE MCP TYPE BREAKERS FOR EACH PUMP. BREAKERS SHALL BE MOUNTED ON AUXILIARY BACK PLATE WITH CUTOUTS THROUGH THE DEAD FRONT PANEL SO THAT BREAKER FACES WILL BE FLUSH WITH THE DEAD FRONT. ALL CIRCUIT BREAKERS SHALL BE SEALED BY THE MANUFACTURER AFTER CALIBRATION TO PREVENT TAMPERING. BREAKERS SHALL HAVE INTERRUPT RATING IN EXCESS OF MAX AVAILABLE FAULT CURRENT ON LOAD SIDE OF UTILITY COMPANY TRANSFORMER.

3. AN OPEN FRAME, ACROSS THE LINE, NEMA RATED MAGNETIC, MOTOR STARTER SHALL BE PROVIDED FOR EACH MOTOR. POWER CONTACTS SHALL BE DOUBLE-BREAK CADMIUM OXIDE SILVER. ALL MOTOR STARTERS SHALL BE EQUIPPED TO PROVIDE UNDER VOLTAGE RELEASE AND OVERLOAD PROTECTION ON ALL THREE PHASES. AN OVERLOAD RESET BUTTON SHALL BE MOUNTED THROUGH THE DEAD FRONT DOOR FOR EACH MOTOR STARTER.

4. EACH PUMP SHALL BE PROVIDED WITH A RUN LIGHT, SEAL FAILURE LIGHT, OVER TEMPERATURE LIGHT, H.O.A. SWITCH AND AN ELAPSED TIME METER. PROVIDE TIME DELAY RELAYS TO PREVENT SIMULTANEOUS START OF BOTH PUMPS UPON RESTORATION OF POWER AFTER A POWER OUTAGE.

5. H.O.A. PUMP MODE SELECTOR SWITCHES SHALL BE CONNECTED TO PERMIT MANUAL START AND MANUAL STOP OF EACH PUMP INDIVIDUALLY, AND TO SELECT AUTOMATIC OPERATION OF EACH PUMP. MANUAL OPERATION SHALL OVERRIDE ALL SHUTDOWN SYSTEMS, BUT NOT THE MOTOR OVERLOAD RELAYS OR PHASE MONITOR CONTACTS. SWITCH CONTACTS SHALL BE RATED FOR 15 AMPERES MINIMUM AT 120 VOLTS NON-INDUCTIVE.

6. A PUMP ALTERNATOR RELAY SHALL BE OF THE ELECTROMECHANICAL INDUSTRIAL DESIGN. RELAY CONTACTS SHALL BE RATED FOR 10 AMPERES MINIMUM AT 120 VOLTS NON-INDUCTIVE. A SWITCH SHALL BE PROVIDED TO PERMIT THE OPERATOR TO SELECT AUTOMATIC ALTERNATION OF THE PUMPS, TO SELECT PUMP NUMBER 1 TO BE THE LEAD PUMP FOR EACH PUMPING CYCLE, OR TO SELECT PUMP NUMBER 2 TO BE LEAD PUMP FOR EACH PUMPING CYCLE.

7. SIX DIGIT ELAPSED TIME METERS (NON-RESET TYPE) SHALL BE CONNECTED TO EACH MOTOR STARTER TO INDICATE THE TOTAL RUNNING TIME OF EACH PUMP IN "HOURS" AND "TENTHS OF HOURS".

8. A PHASE MONITOR AND TRANSIENT VOLTAGE SURGE SUPPRESSOR (TVSS) SHALL BE PROVIDED. TVSS TERMINATIONS PER MANUFACTURER'S INSTRUCTIONS.

9. A WEATHERPROOF, CORROSION RESISTANT 120V, GFIC, CONVENIENCE RECEPTACLE SHALL BE PROVIDED ON THE EXTERIOR OF THE PANEL. THE RECEPTACLE SHALL BE WIRED THROUGH A 20 AMP SINGLE POLE CIRCUIT BREAKER.

10. DRY CONTACTS SHALL BE PROVIDED FOR THE CITY'S SCADA SYSTEM. A TOTAL OF EIGHT (8) POINTS SHALL BE MONITORED; LOSS OF POWER, HIGH LEVEL ALARM, PUMP #1 RUNNING, PUMP #2 RUNNING, HOA SWITCH FOR PUMP #1 IN AUTOMATIC POSITION, HOA SWITCH FOR PUMP #2 IN AUTOMATIC POSITION, GENERATOR RUNNING, SPARE.

11. PROVIDE REMOTE TELEMETRY UNIT COMPLETE, AS REQUIRED BY THE CITY. PROVIDE INTERCONNECTING WIRING BETWEEN PUMP CONTROL PANEL AND TELEMETRY UNIT ENCLOSURE.

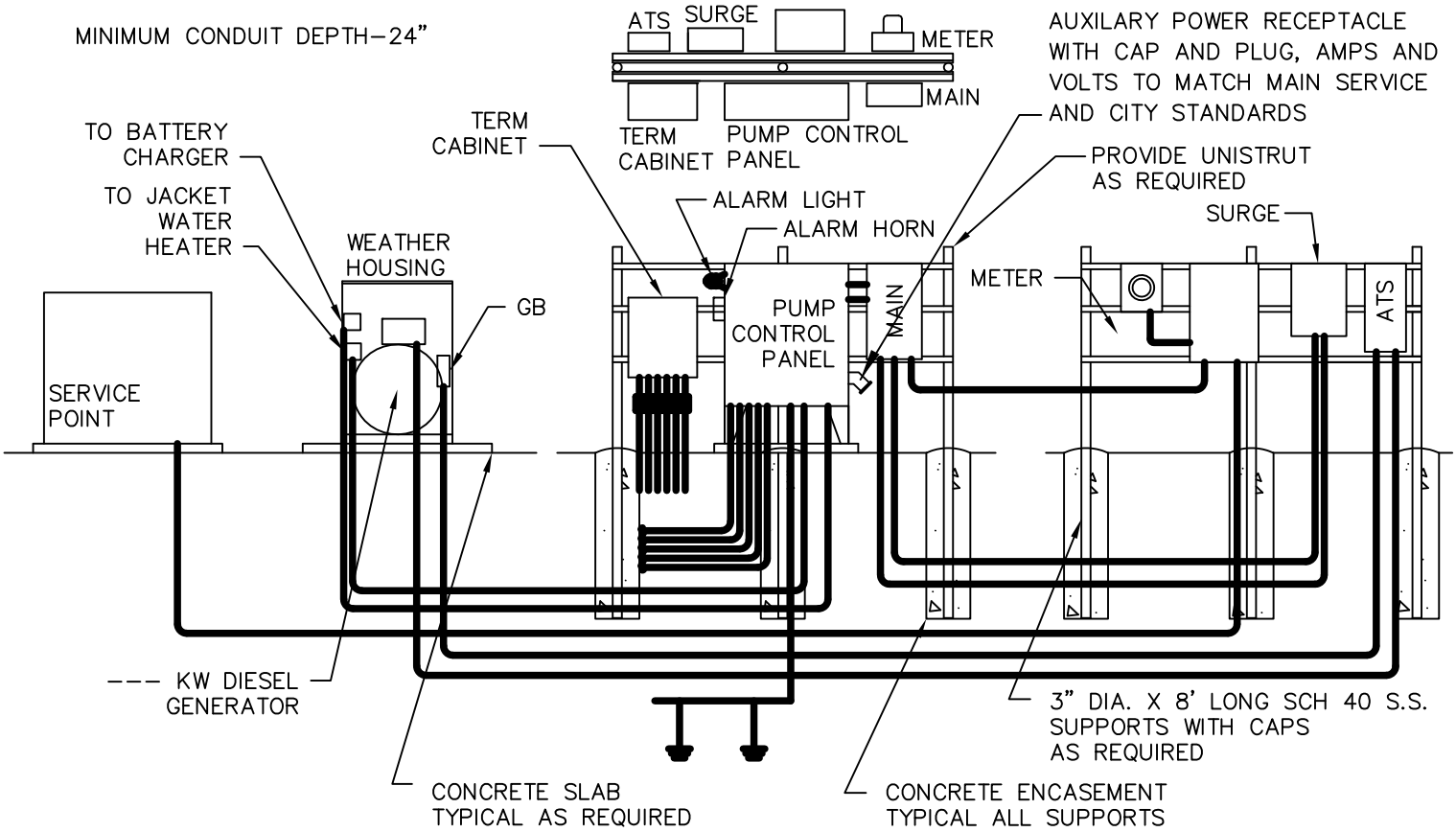

NOTES:

1. ELECTRICAL EQUIPMENT TO BE ACCESSIBLE WITH A MINIMUM OF 5 FEET CLEARANCE.
2. ALL CABLES TO PANELS AND CABINETS SHALL BE INSTALLED IN RIGID CONDUITS, MINIMUM 2" DIAMETER. ABOVE GRADE CONDUITS SHALL BE GALVANIZED. BELOW GRADE CONDUITS SHALL BE PVC.
3. AT LEAST TWO SEALS SHALL BE PROVIDED FOR CABLES IN CONDUITS. FOR ENTRY POINTS AT PANELS AND CABINETS, SEALS SHALL BE CROUSE–HINDS CHICO O/E EYS TYPE. AT JUNCTION BOXES AND WETWELLS, SEALS SHALL BE ELECTRIC PUTTY.

CITY OF GROVELAND STANDARD DETAILS: SANITARY SEWER

CITY OF GROVELAND ESTABLISHED 1922	LIFT STATION ELECTRICAL SCHEMATIC	REVISED AUGUST 13, 2018 SCALE: N.T.S. S–10

1. ALL PUMP STATIONS SHALL BE PROVIDED WITH A SUITABLY-SIZED STANDBY EMERGENCY GENERATOR ASSEMBLY, TO BE SIZED BY THE PROJECT ENGINEER. THE GENERATOR SHALL BE CAPABLE OF OPERATING THE COMPLETE PUMP STATION, INCLUDING PUMPS, CONTROLS, INSTRUMENTATION AND SITE LIGHTING. AN EXERCISE TIMER SHALL BE PROVIDED, SET TO RUN UNDER LOAD CONDITIONS.
2. THE GENERATOR SHALL BE PROVIDED WITH A SUITABLY-SIZED AUTOMATIC TRANSFER SWITCH. THE CIRCUIT BREAKER SHALL BE SIZED APPROPRIATELY FOR THE GENERATOR ASSEMBLY. THE SUB-BASE DUAL WALL FUEL TANK SHALL BE THE MANUFACTURER'S STANDARD UNIT, SIZED TO PROVIDE A MINIMUM OF 24-HOURS OF FUEL TO OPERATE THE GENERATOR. HOWEVER, THE FUEL TANK SHALL BE LESS THAN 500 GALLONS IN SIZE.
3. THE MAXIMUM SOUND LEVEL WITH THE COMPLETE GENERATOR ASSEMBLY OPERATING SHALL NOT EXCEED 72 DBA AT 23 FEET. EXHAUST SYSTEM SHALL BE IN COMPLIANCE WITH EPA TIER 2 EXHAUST EMISSION REQUIREMENTS.
4. THE UNIT SHALL BE PROVIDED WITH AN APPROPRIATE BLOCK HEATER FOR COLD STARTS. THE TRANSFORMER FOR PROVIDING POWER TO THE BLOCK HEATER SHALL BE PLACED SEPARATELY FROM THE CONTROL PANEL AND THE GENERATOR UNIT.
5. GENERATOR ASSEMBLY INCLUDING BASE AND VIBRATION ISOLATORS SHALL BE ANCHORED TO A SUITABLY-SIZED CONCRETE PAD IN NEARBY PROXIMITY TO THE PUMP STATION.
6. THE GENERATOR UNIT SHALL BE AS MANUFACTURED BY CUMMINS/ONAN. A GENERAC OR COMPARABLE CATERPILLAR UNIT SHALL BE CONSIDERED ACCEPTABLE, PROVIDED THE FEATURES PROVIDED ARE THE SAME.
7. THE ENGINE GENERATOR SET SHALL BE SHOP PRIMED AND FINISH COATED IN ACCORDANCE WITH THE MANUFACTURER'S STANDARD PRACTICE. AN ADEQUATE SUPPLY OF TOUCH-UP PAINT SHALL BE PROVIDED.
8. A REPRESENTATIVE OF THE CITY OF GROVELAND SHALL BE PRESENT FOR THE INITIAL START-UP OF THE GENERATOR ASSEMBLY. SPECIAL TOOLS AND SPARE PARTS AS REQUIRED SHALL BE PROVIDED TO THE CITY OF GROVELAND.
9. THE FOLLOWING TABLE SHALL BE COMPLETED AND SHOWN ON THE PLANS.

GENERATOR ASSEMBLY MANUFACTURER: _____

MODEL NO.: _____

ATS MODEL NO.: _____

MUFFLERS RESIDENTIAL GRADE, BATTERY CHARGER, DUAL WALL SUBBASE FUEL STORAGE TANK _____ GALLONS

SOUND ATTENUATED OUTDOOR ENCLOSURE

RAINHOODS: _____ YES _____ NO

DISTRIBUTION PANEL: _____ FACTORY MOUNTED
_____ ADJACENT TO GENERATOR ASSEMBLY

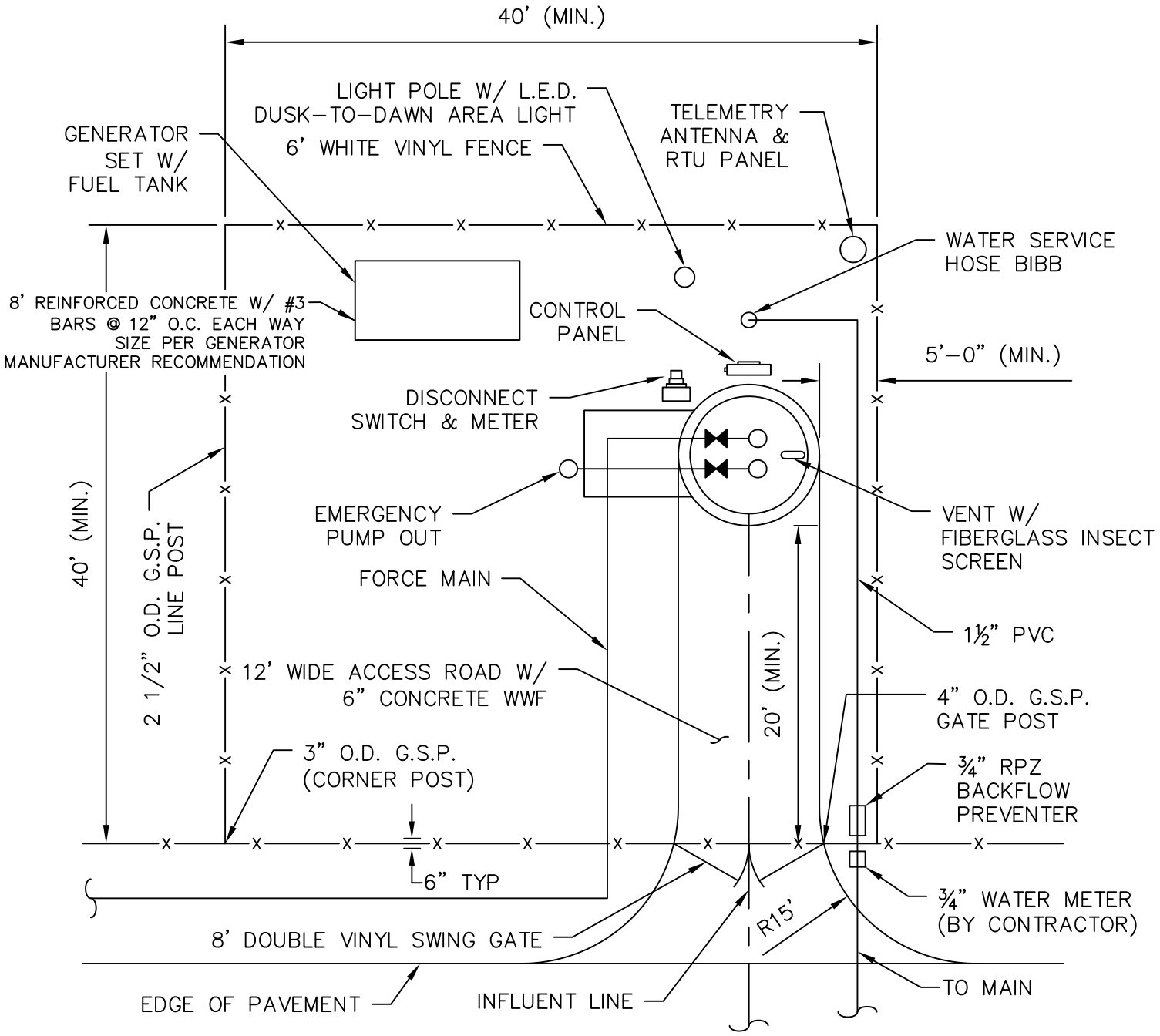

NOTES:

1. FENCED AREA SHALL BE LAID WITH A MINIMUM OF 6" OF ¾" WASHED ROCK OVER FILTER CLOTH.
2. INFLUENT AND EFFLUENT MAINS SHALL BE CLEAR OF PANEL.
3. PLAN MAY VARY BASED UPON SPECIFIC SITE REQUIREMENTS UPON APPROVAL FROM CITY

CITY OF GROVELAND STANDARD DETAILS: SANITARY SEWER

CITY OF GROVELAND ESTABLISHED 1922	LIFT STATION SITE PLAN	REVISED AUGUST 13, 2018 SCALE: N.T.S. S-12