G–1 EROSION CONTROL FEATURES

G–2 EROSION CONTROL DETAILS. TYPE III SILT FENCE

G–3 EROSION CONTROL DETAILS. TYPE I FLOATING TURBIDITY BARRIER

G–4 BEDDING DETAILS. CLASS A BEDDING AND TRENCHING DETAIL

G–5 BEDDING DETAILS. CLASS B BEDDING AND TRENCHING DETAIL

G–6 OPEN CUT AND REPAIR DETAIL. TRENCH REPAIR–PAVED AREAS

G–7 RESTRAINED JOINT DETAILS

G–8 JOINT RESTRAINTS PVC C–900 PIPE (4" TO 12")

G–9 JACK AND BORE DETAIL

G–10 DIRECTIONAL DRILLING DETAILS

G–11 PIPING CLEARANCE NOTES

G–12 ADJUSTMENT TO CLEAR EXISTING UTILITIES

G–13 TRENCHING LIMITATIONS AROUND TREES

G–14 FENCE DETAILS

G–15 HOSE BIBB & VACUUM BREAKER

G–16 LOCATING WIRE DETAILS

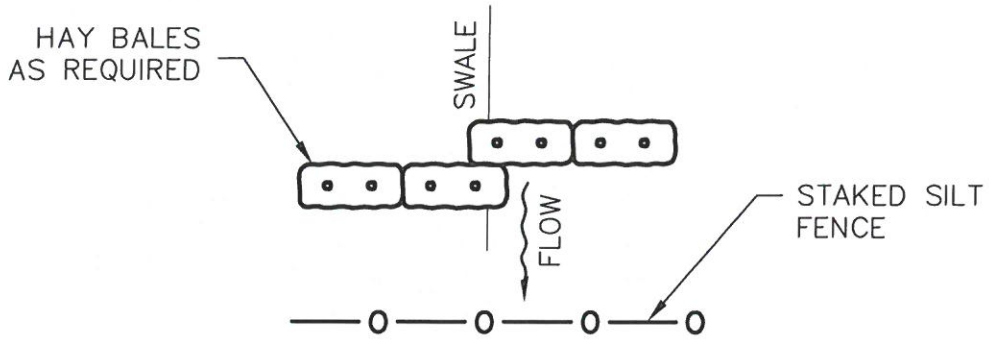

PLAN

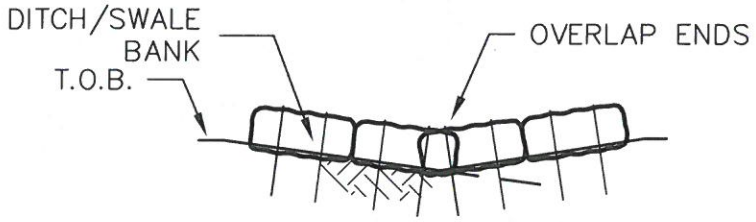

ELEVATION

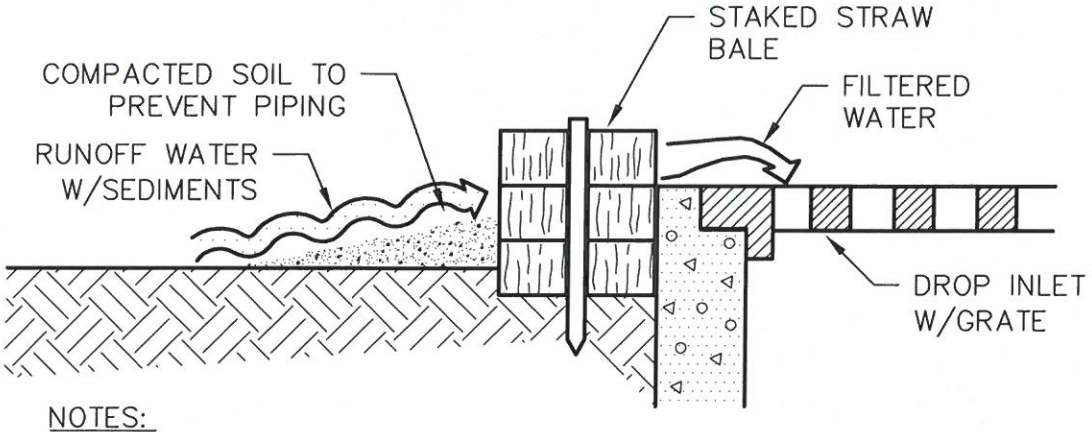

NOTES:

1. HAY BALES SHALL BE TRENCHED 3" TO 4" AND STAKED WITH (2) 1"X2"X4" WOOD STAKES PER BALE.
2. SILT FENCE SHALL BE DOWN STREAM OF HAY BALES.
3. ADJACENT BALES SHALL BE BUTTED FIRMLY TOGETHER. UNAVOIDABLE GAPS SHALL BE PLUGGED WITH HAY OR STRAW TO PREVENT SILT FROM PASSING.

CITY OF GROVELAND STANDARD DETAILS: GENERAL

CITY OF GROVELAND ESTABLISHED 1922

METZGER & WILLARD, INC.
Civil • Environmental Engineers • Surveyors
8600 Hidden River Parkway, Suite 550
Tampa, Florida 33637 (813) 977-6005

EROSION CONTROL FEATURES

DATE: JULY 7, 2008
SCALE: N.T.S.

G-1

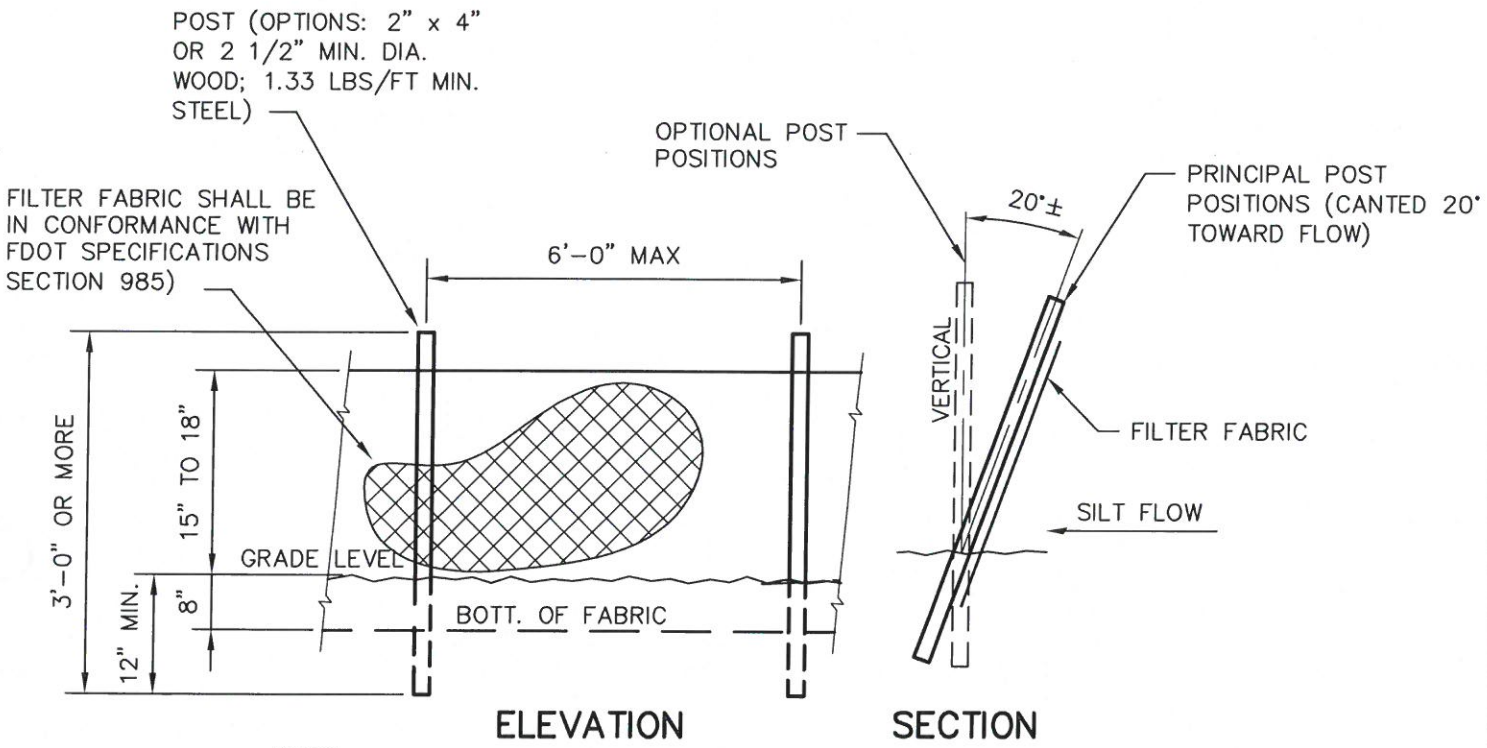

NOTE:

WHERE USED IN DITCHES, THE SPACING FOR TYPE III SILT FENCE SHALL BE IN ACCORDANCE WITH FDOT DESIGN STANDARDS, 2002, INDEX NO. 102, SHEET 1 OF 3, CHART NO. 1.

CITY OF GROVELAND STANDARD DETAILS: GENERAL

CITY OF GROVELAND ESTABLISHED 1922

METZGER & WILLARD, INC.
Civil • Environmental Engineers • Surveyors
8600 Hidden River Parkway, Suite 550
Tampa, Florida 33637 (813) 977-6005

TYPE III SILT FENCE

DATE: JULY 7, 2008
SCALE: N.T.S.

G-2

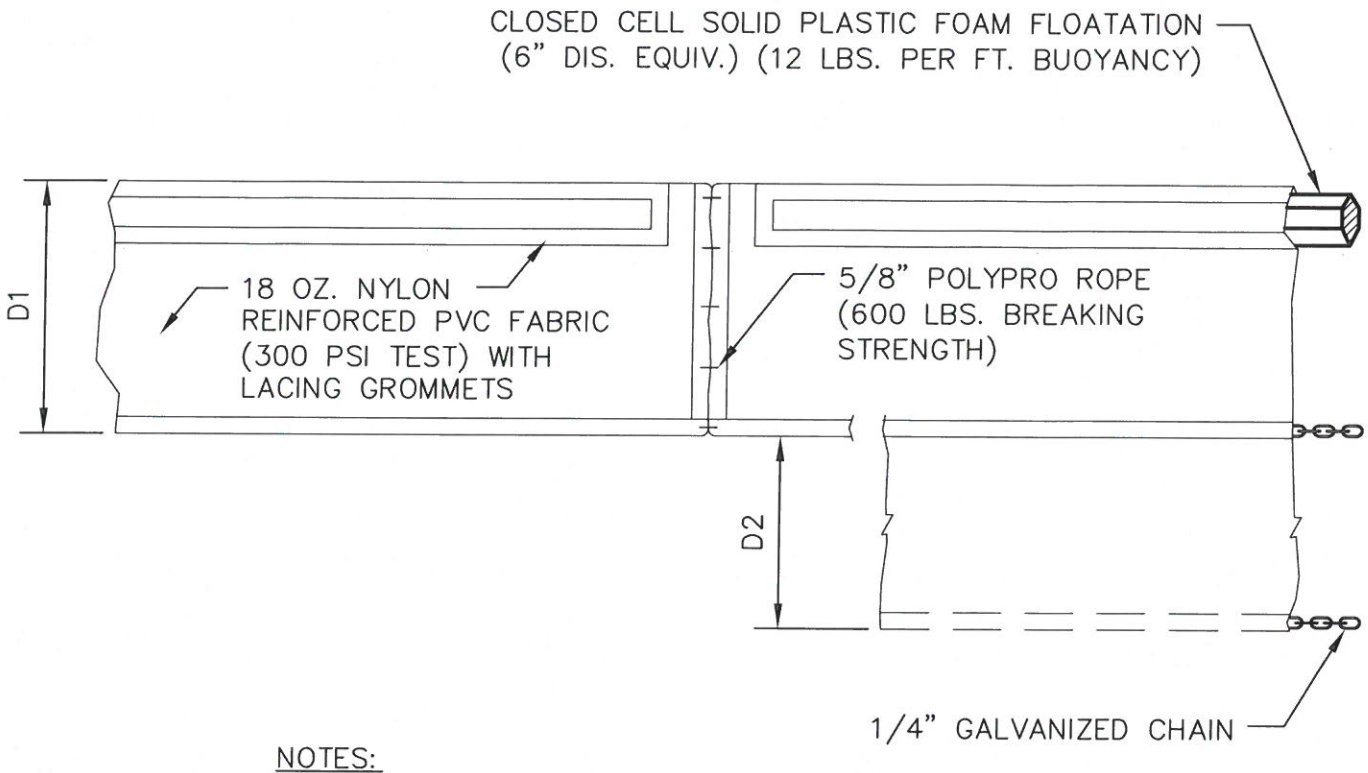

NOTES:

D_1 = 5' STD. (SINGLE PANEL FOR DEPTHS 5' OR LESS).

D_2 = 5' STD. (ADDITIONAL PANEL FOR DEPTHS > 5')

CURTAIN TO REACH BOTTOM UP TO DEPTHS OF 10 FEET. TWO (2) PANELS TO BE USED FOR DEPTHS GREATER THAN 10 FEET UNLESS OTHERWISE SPECIFIED IN THE CONSTRUCTION PLANS OR AS DIRECTED BY THE ENGINEER

CITY OF GROVELAND STANDARD DETAILS: GENERAL

TYPE I FLOATING TURBIDITY BARRIER

DATE: JULY 7, 2008
SCALE: N.T.S.

G-3

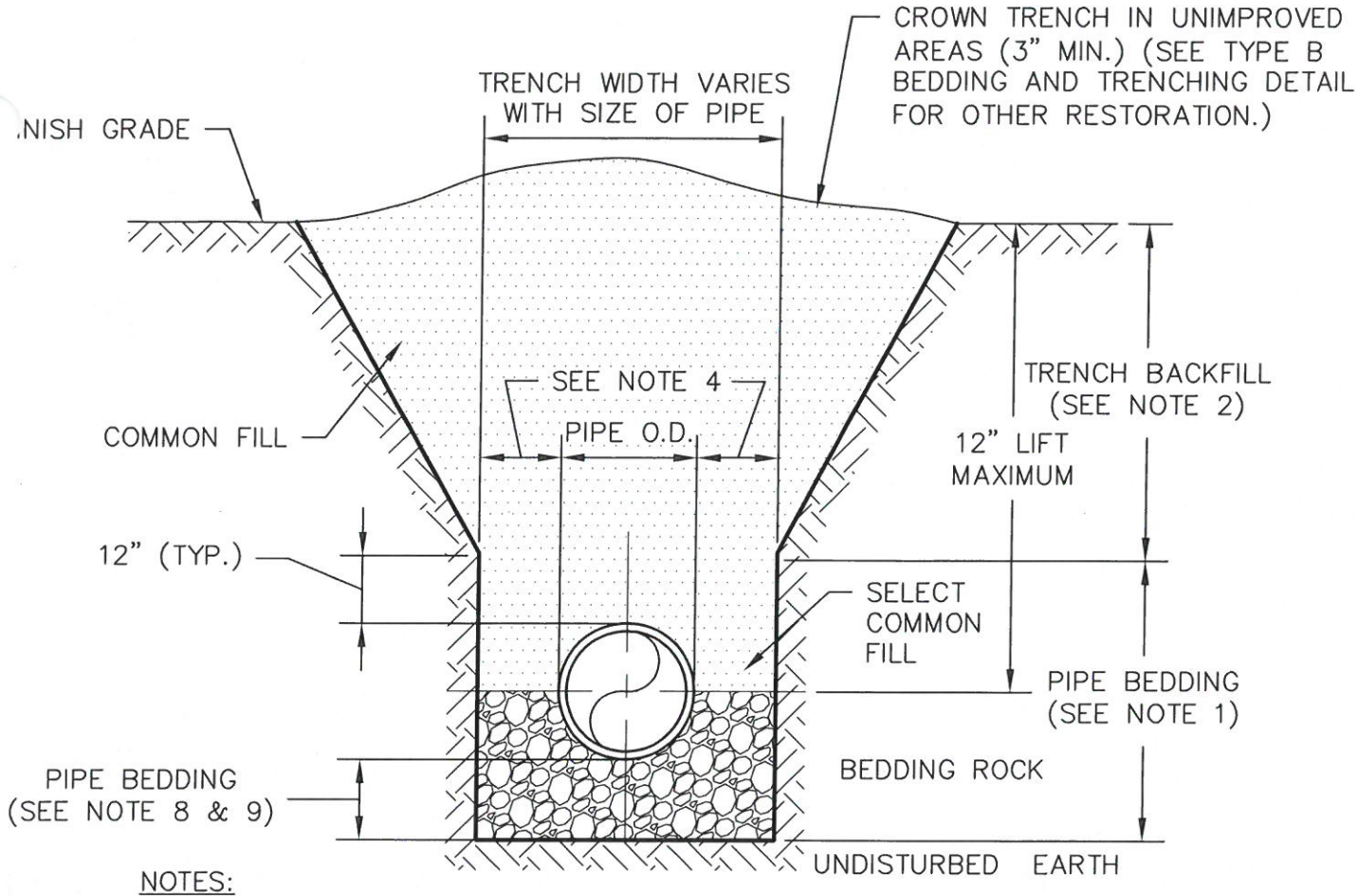

NOTES:

1. PIPE BEDDING: SELECT COMMON FILL COMPACTED TO 98% OF THE MAXIMUM DENSITY AS PER AASHTO T –180.
2. TRENCH BACK FILL: COMMON FILL COMPACTED TO 98% OF THE MAXIMUM DENSITY AS PER AASHTO T –180. 3. USE OF TYPE "A" BEDDING TO BE DETERMINED IN THE FIELD AS DIRECTED BY THE CITY OF GROVELAND. REQUIRED AS DIRECTED BY THE CITY OF GROVELAND.
4. (*): 15" MAX. FOR PIPE DIAMETER LESS THAN 24", AND 24" MAX. FOR PIPE DIAMETER 24" AND LARGER.
5. WATER SHALL NOT BE PERMITTED IN THE TRENCH DURING CONSTRUCTION.
6. ALL PIPE TO BE INSTALLED WITH BELL FACING UPSTREAM TO THE DIRECTION OF THE FLOW.
7. SHEETING AND BRACING SHALL BE USED IN ACCORDANCE WITH CURRENT TRENCHING REGULATIONS AND WHERE UNSAFE CONDITIONS.
8. EXISTING GRAVITY SEWERS SHALL UTILIZE TYPE A BEDDING, IF REQUIRED BY THE CITY. BEDDING DEPTH SHALL BE 4" MINIMUM FOR PIPE DIAMETER LESS THAN 15", AND 6" MINIMUM FOR PIPE DIAMETER 16" AND LARGER.
9. DEPTH FOR REMOVAL OF UNSUITABLE MATERIAL SHALL GOVERN DEPTH OF BEDDING ROCK BELOW THE PIPE. CITY AND/OR PROJECT ENGINEER SHALL DETERMINE IN THE FIELD REQUIRED REMOVAL OF UNSUITABLE MATERIAL TO REACH SUITABLE FOUNDATION.

CITY OF GROVELAND STANDARD DETAILS: GENERAL

CITY OF GROVELAND ESTABLISHED 1922

METZGER & WILLARD, INC.
Civil • Environmental Engineers • Surveyors
8600 Hidden River Parkway, Suite 550
Tampa, Florida 33637 (813) 977-6005

CLASS A BEDDING AND TRENCHING DETAIL

DATE: JULY 7, 2008
SCALE: N.T.S.

G–4

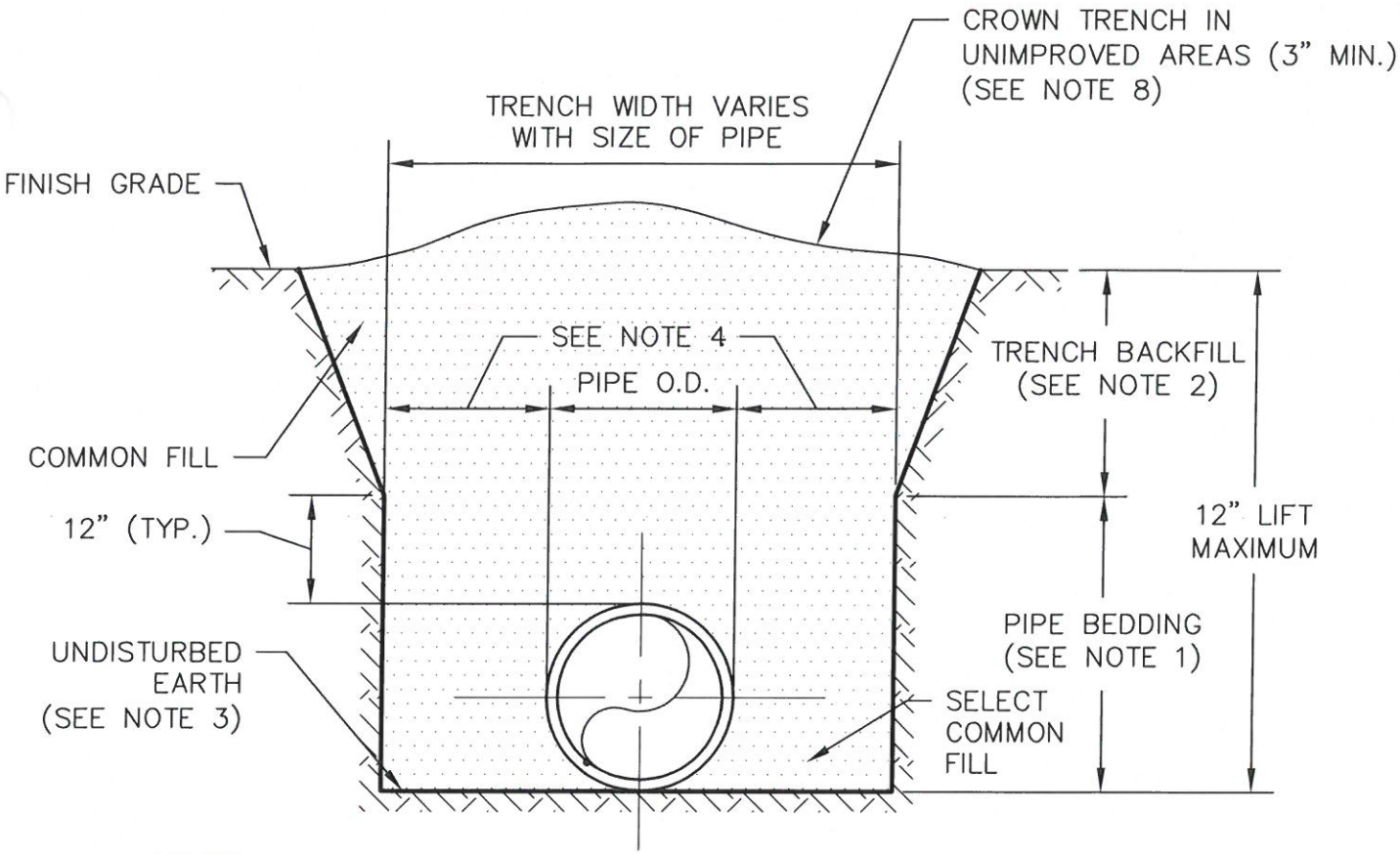

NOTES:

1. PIPE BEDDING: SELECT COMMON FILL COMPACTED TO 98% OF THE MAXIMUM DENSITY AS PER AASHTO T –180.
2. TRENCH BACK FILL: COMON FILL COMPACTED TO 98% OF THE MAXIMUM DENSITY AS PER AASHTO T –180.
3. PIPE BEDDING UTILIZING SELECT COMMON FILL OR BEDDING ROCK IN ACCORDANCE WITH TYPE A BEDDING AND TRENCHING DETAIL MAY BE REQUIRED AS DIRECTED BY THE CITY OF GROVELAND.
4. (*): 15" MAX. FOR PIPE DIAMETER LESS THAN 24", AND 24" MAX. FOR PIPE DIAMETER 24" AND LARGER.
5. WATER SHALL NOT BE PERMITTED IN THE TRENCH DURING CONSTRUCTION.
6. ALL PIPE TO BE INSTALLED WITH BELL FACING UPSTREAM TO THE DIRECTION OF THE FLOW.
7. SHEETING AND BRACING SHALL BE USED IN ACCORDANCE WITH CURRENT TRENCHING REGULATIONS AND WHERE UNSAFE CONDITIONS.
8. FINAL RESTORATION IN IMPROVED AREAS SHALL BE IN COMPLIANCE WITH ALL APPLICABLE REGULATIONS OF GOVERNING AGENCIES. SURFACE RESTORATION WITHIN THE CITY OF GROVELAND'S RIGHT–OF–WAY SHALL COMPLY WITH REQUIREMENTS OF RIGHT–OF–WAY UTILIZATION REGULATIONS AND ROAD CONSTRUCTION SPECIFICATIONS.

CITY OF GROVELAND STANDARD DETAILS: GENERAL

CITY OF GROVELAND ESTABLISHED 1922

METZGER & WILLARD, INC.
Civil • Environmental Engineers • Surveyors
8600 Hidden River Parkway, Suite 550
Tampa, Florida 33637 (813) 977–6005

CLASS B BEDDING AND TRENCHING DETAIL

DATE: JULY 7, 2008
SCALE: N.T.S.

G–5

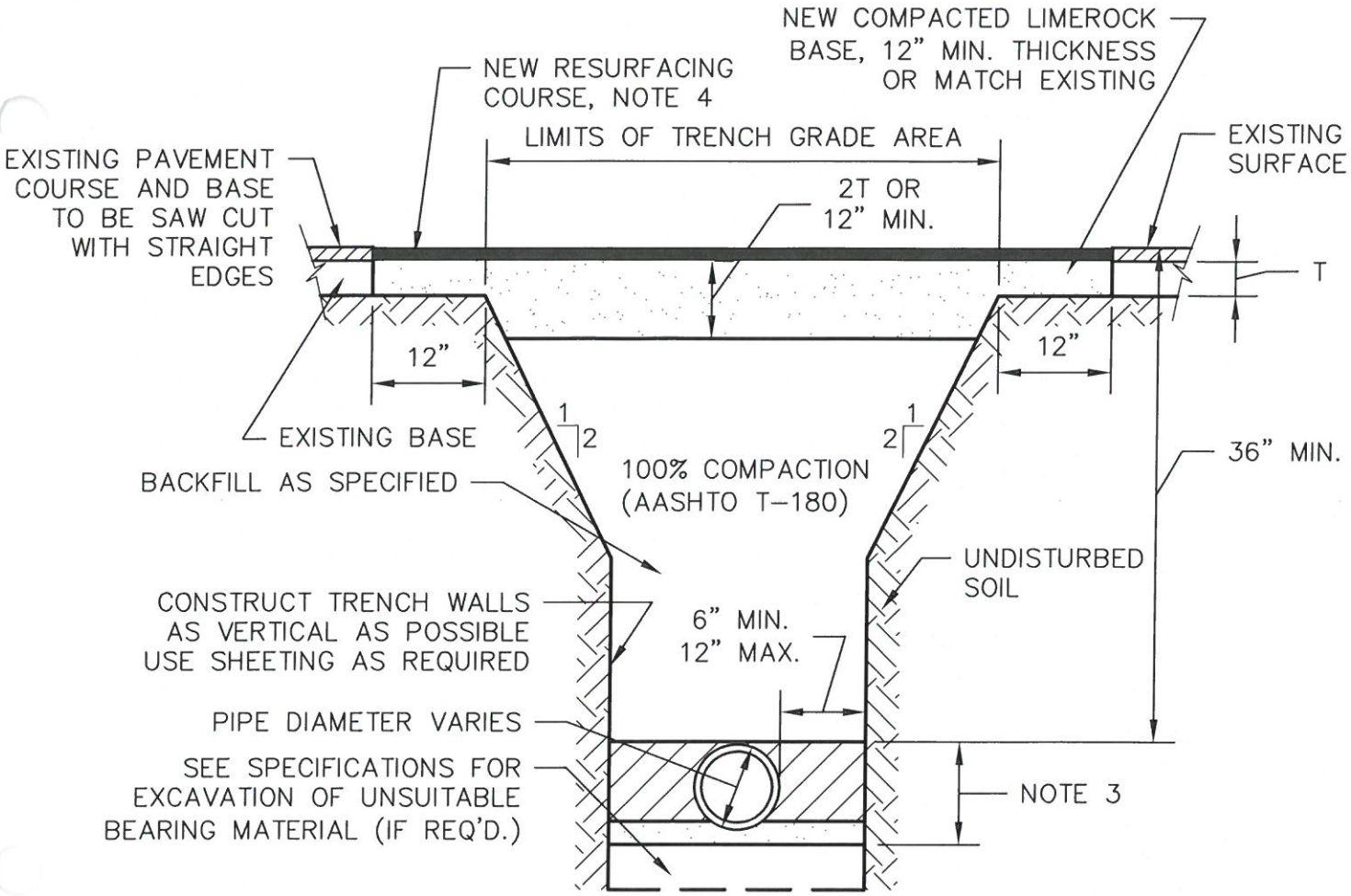

NOTES:

1. DEWATERING SHALL CONTINUE UNTIL BACKFILL IS COMPACTED AT LEAST 2 FEET ABOVE WATER TABLE.
2. SURFACE TREATED PAVEMENT JOINTS SHALL BE LAPPED AND FEATHERED.
3. EMBEDMENT TYPE 3 PER AWWA C600/C605. PIPE BEDDED IN SAND TO DEPTH OF ⅛ PIPE DIAMETER, 4 INCHES MINIMUM. BACKFILL COMPACTED TO TOP OF PIPE. BACKFILL SHALL BE COMPACTED IN ONE FOOT LIFTS WITH MECHANICAL TAMPERS AND UP TO THE BOTTOM OF THE ROADWAY BASE. SPECIAL ATTENTION SHALL BE GIVEN TO ADEQUATE COMPACTION OF THE PIPE HAUNCHES. A DENSITY TEST IS REQUIRED AT THE SPRING LINE, ONE FOOT ABOVE THE PIPE CROWN AND ONE FOOT VERTICALLY THEREAFTER.
4. IN PAVEMENT CUT, PROVIDE 2 INCHES OF TYPE SIII ASPHALT; THEN, 1 INCH OF TYPE SI OVERLAY OR MATCH EXISTING IF GREATER, 50 FEET LONG CENTERED ON CUT.

TRENCH REPAIR–PAVED AREAS AND PAVEMENT REPLACEMENT

CITY OF GROVELAND STANDARD DETAILS: GENERAL

CITY OF GROVELAND ESTABLISHED 1922

METZGER & WILLARD, INC.
Civil • Environmental Engineers • Surveyors
8600 Hidden River Parkway, Suite 550
Tampa, Florida 33637 (813) 977-6005

OPEN CUT AND REPAIR DETAIL

DATE: JULY 7, 2008
SCALE: N.T.S.

G–6

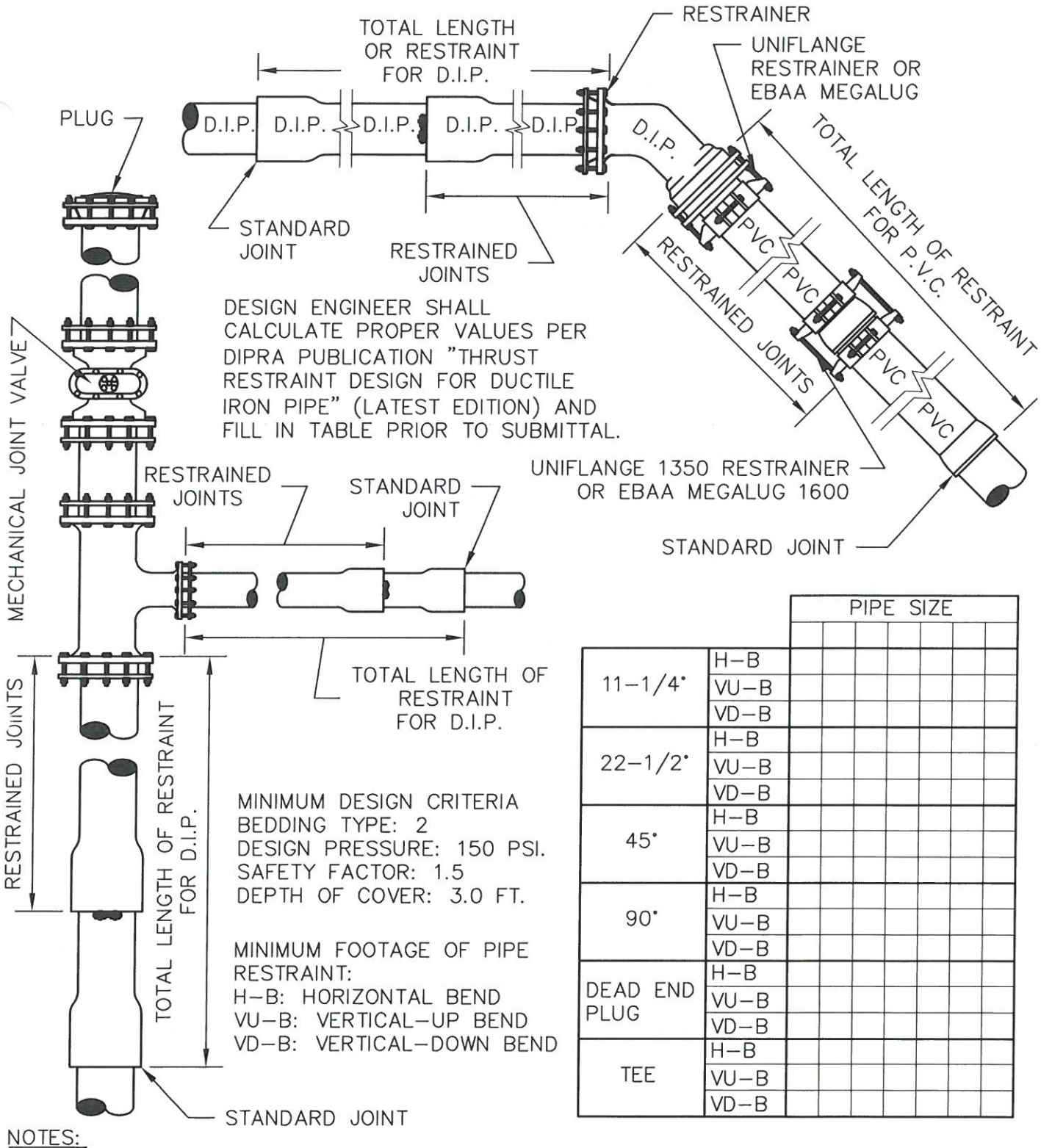

		PIPE SIZE						
11-1/4°	H-B							
	VU-B							
	VD-B							
22-1/2°	H-B							
	VU-B							
	VD-B							
45°	H-B							
	VU-B							
	VD-B							
90°	H-B							
	VU-B							
	VD-B							
DEAD END PLUG	H-B							
	VU-B							
	VD-B							
TEE	H-B							
	VU-B							
	VD-B							

NOTES:

1. FOR LENGTH OF PIPE AND NUMBER OF JOINTS TO BE RESTRAINED SEE TABLE (THIS PAGE).
2. ONLY DUCTILE IRON FITTINGS SHALL BE USED AT JOINTS TO BE RESTRAINED UNLESS OTHERWISE SPECIFIED BY CITY.

CITY OF GROVELAND STANDARD DETAILS: GENERAL

CITY OF GROVELAND ESTABLISHED 1922

METZGER & WILLARD, INC.
Civil • Environmental Engineers • Surveyors
8600 Hidden River Parkway, Suite 550
Tampa, Florida 33637 (813) 977-6005

RESTRAINED JOINTS DETAILS

DATE: JULY 7, 2008
SCALE: N.T.S.

G-7

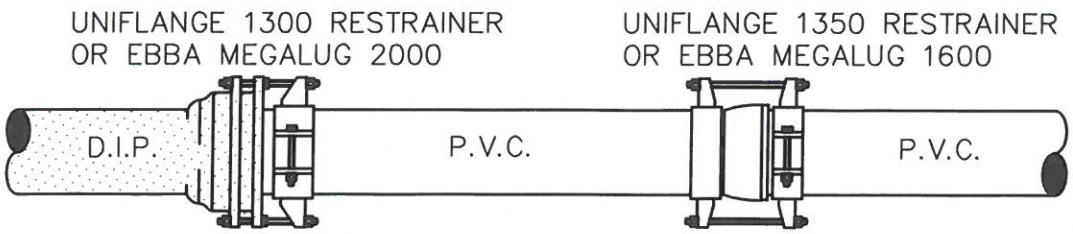

METHOD OF RESTRAINING PUSH–ON JOINT PIPE

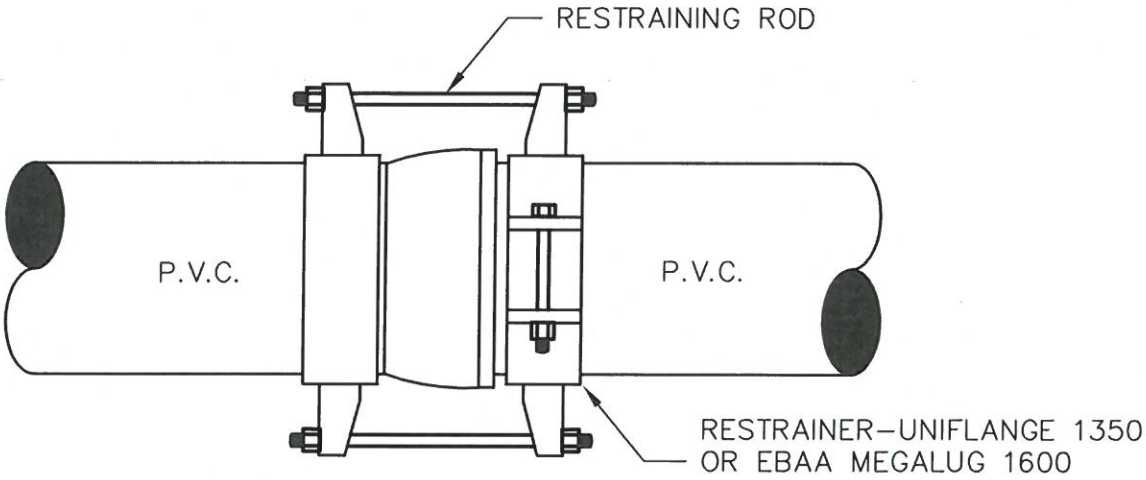

DETAIL PUSH–ON JOINT

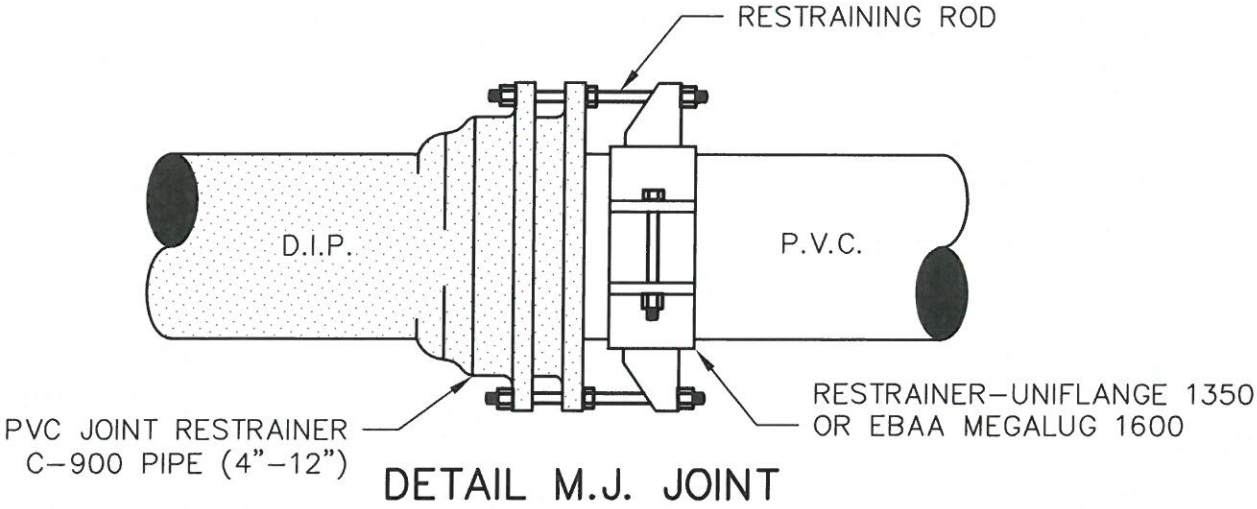

DETAIL M.J. JOINT

CITY OF GROVELAND STANDARD DETAILS: GENERAL

CITY OF GROVELAND ESTABLISHED 1922

METZGER & WILLARD, INC.
Civil • Environmental Engineers • Surveyors
8600 Hidden River Parkway, Suite 550
Tampa, Florida 33637 (813) 977–6005

JOINT RESTRAINTS
P.V.C. C–900 PIPE
(4" TO 12")

DATE: JULY 7, 2008
SCALE: N.T.S.

G–8

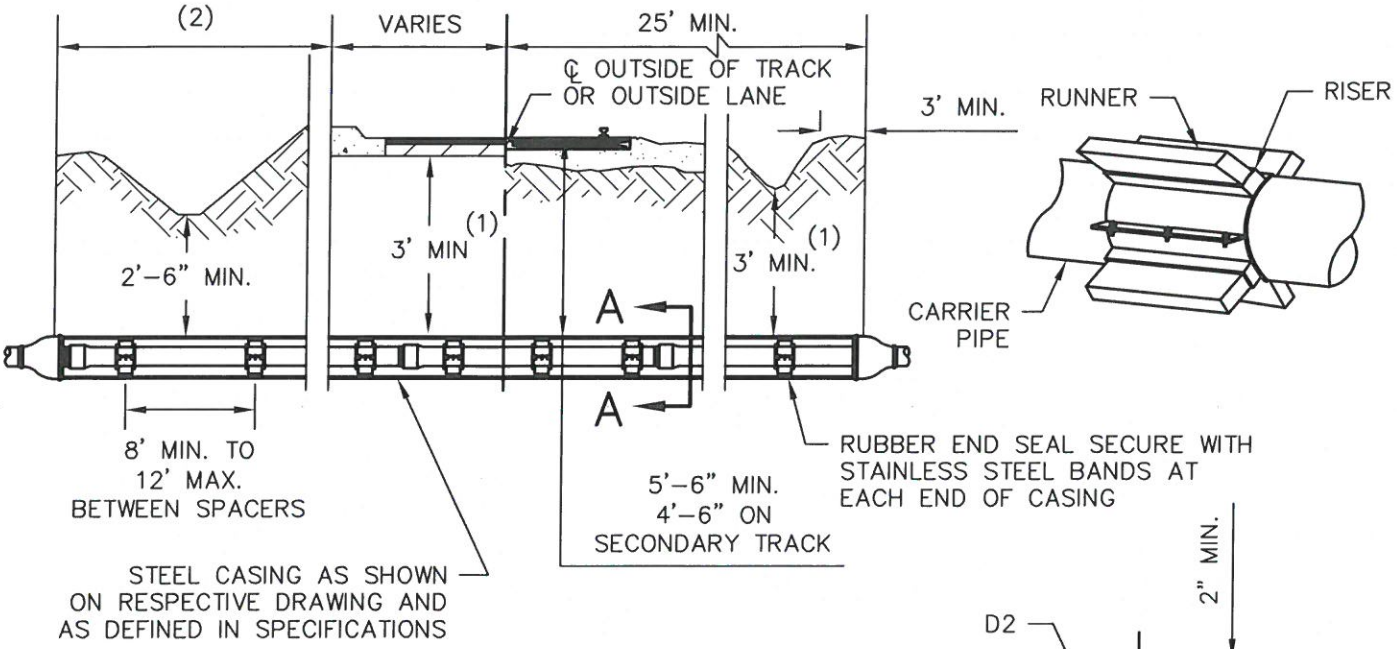

NOTES:

(1) VERTICAL DIMENSIONS TYPICAL FOR CASINGS

(2) WITH CURB: 6' STATE & 2' CITY ROADS MINIMUM WITHOUT CURB: 8' STATE & 4' CITY ROADS MINIMUM

(3) STEEL CASING PIPE SHALL CONFORM TO THE REQUIREMENTS OF AWWA C-200 AND ASTMA-139, GRADE B.

(4) WHEN CASING IS INSTALLED WITHOUT BENEFIT OF A PROTECTIVE COATING, AND SAID CASING IS NOT CATHODICALLY PROTECTED, THE WALL THICKNESS SHOWN SHALL BE INCREASED TO THE NEAREST STANDARD SIZE WHICH IS A MINIMUM OF 0.063" GREATER THAN THE THICKNESS SHOWN EXCEPT FOR DIAMETERS LESS THAN 12.75".

(5) FOR REFERENCE ONLY.

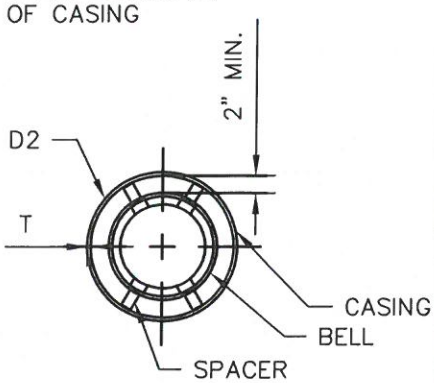

SECTION A-A

PRESSURE MAIN TO BE RESTRAINED WITH MANUFACTURERS RESTRAINED JOINTS THROUGH CASING. USE (3) SS CASING SPACER CENTERED ON EACH PIPE LENGTH. TIMBER SKIDS ARE OPTIONAL.

	MINIMUM CASING SIZE AND THICKNESS																		
	D.I.P.-M.J.	—	—	—	4"	6"	—	8"	10"	12"	14"	16"	18"	20"	—	24"	30"	36"	42"	48"
	D.I.P.-P.O.	—	—	4"	—	6"	8"	10"	12"	—	14"	16"	18"	20"	24"	—	30"	36"	42"	48"
	P.V.C.	—	—	4"	6"	—	8"	10"	12"	—	—	—	—	—	—	—	—	—	—	—
(3)	STEEL CASING PIPE (D2)	8"(5)	10"	12"	14"	16"	18"	20"	24"	24"	30"	30"	30"	36"	36"	42"	48"	54"	60"	66"
	WALL THICKNESS (T) ROADS	.188"	.188"	.188"	.250"	.250"	.250"	.250"	.250"	.250"	.312"	.312"	.312"	.375"	.375"	.500"	.500"	.500"	.500"	.500"
(4)	WALL THICKNESS (T) R.R.	.188"	.188"	.188"	.219"	.219"	.250"	.28"	.344"	.344"	.406"	.406"	.406"	.469"	.469"	.500"	—	—	—	—

CITY OF GROVELAND STANDARD DETAILS: GENERAL

JACK AND BORE DETAIL

DATE: JULY 7, 2008
SCALE: N.T.S.

G-9

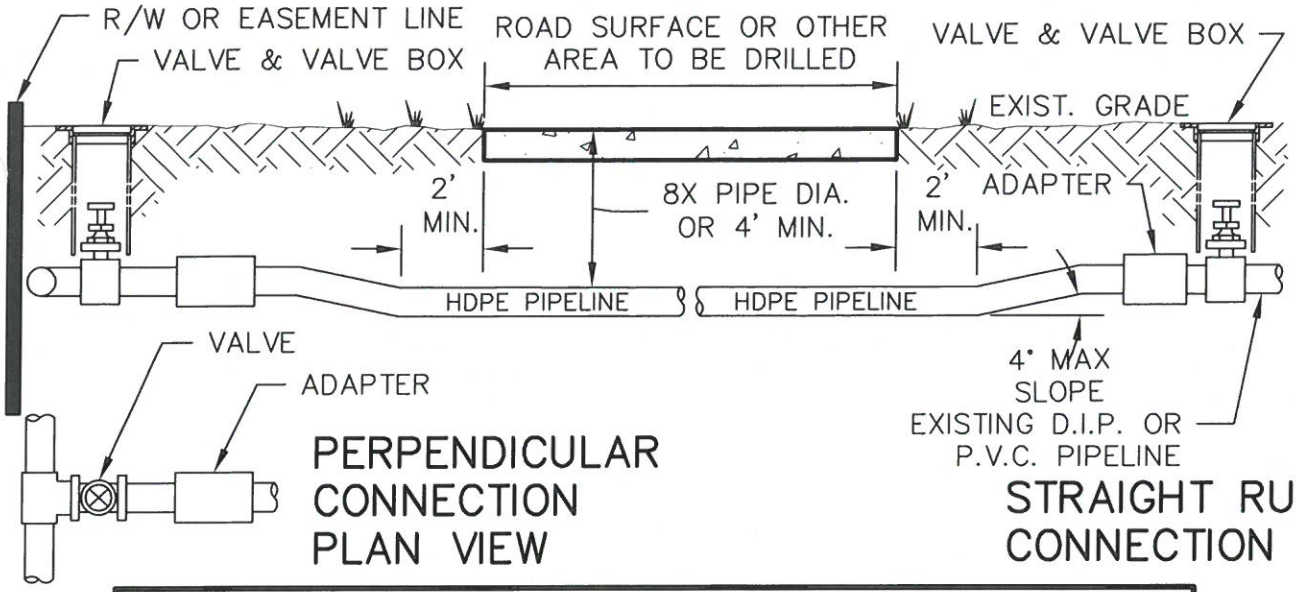

PERPENDICULAR CONNECTION PLAN VIEW

STRAIGHT RUN CONNECTION

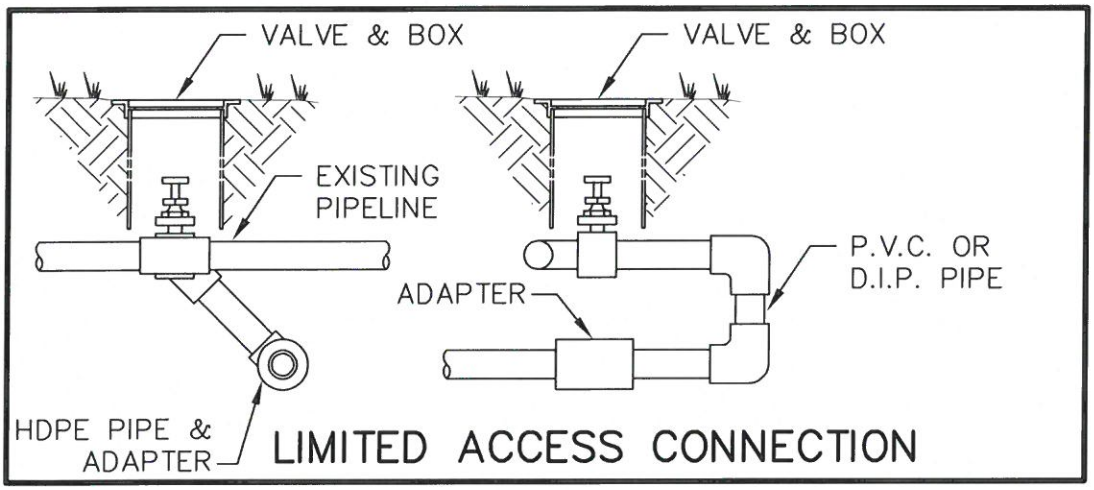

LIMITED ACCESS CONNECTION

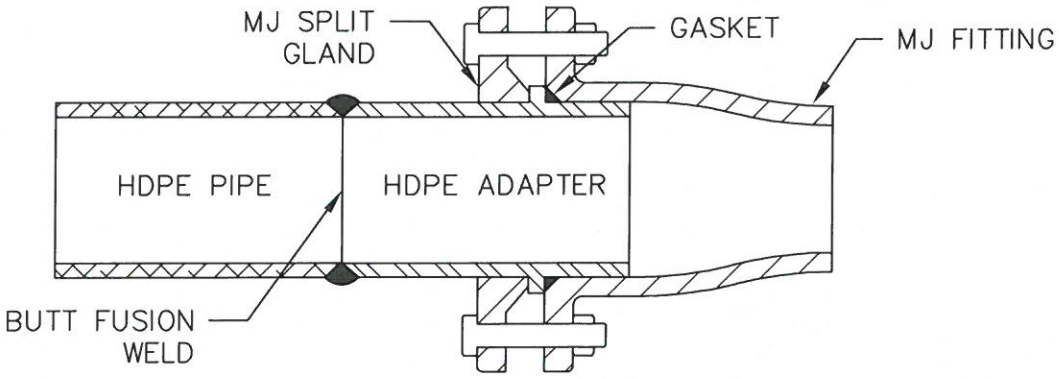

HDPE–MJ ADAPTER

NOTES:

1. DIRECTIONAL DRILLS SHALL BE COMPLETED USING DR11 HDPE PIPE, DUCTILE IRON SIZE.
2. ALL DIRECTIONAL DRILLS SHALL BE AT A DEPTH OF 8X PIPE DIAMETER BELOW THE ROADWAY SURFACE OR 4' WHICHEVER IS GREATER.
3. ALL HDPE MUST BE COLOR CODED (SAFETY BLUE–WATER, SAFETY GREEN FOR SEWER AND PANTONE PURPLE FOR RECLAIMED WATER); BUTT FUSION WELDED; AND CONNECTED WITH HDPE–MJ ADAPTER.

CITY OF GROVELAND STANDARD DETAILS: GENERAL

CITY OF GROVELAND ESTABLISHED 1922

METZGER & WILLARD, INC.
Civil • Environmental Engineers • Surveyors
8600 Hidden River Parkway, Suite 550
Tampa, Florida 33637 (813) 977–6005

DIRECTIONAL DRILLING DETAIL

DATE: JULY 7, 2008
SCALE: N.T.S.

G–10

1. NEW OR RELOCATED, UNDERGROUND WATER MAINS SHALL BE LAID TO PROVIDE A HORIZONTAL DISTANCE OF AT LEAST THREE FEET BETWEEN THE OUTSIDE OF THE MAIN AND THE OUTSIDE OF ANY EXISTING OR PROPOSED STORM SEWER, STORMWATER FORCE MAIN, OR RECLAIMED WATER MAIN REGULATED UNDER PART III OF CHAPTER 62-610, F.A.C., (TYPICAL MUNICIPAL RECLAIMED WATER).
2. NEW OR RELOCATED, UNDERGROUND WATER MAINS SHALL BE LAID TO PROVIDE A HORIZONTAL DISTANCE OF AT LEAST THREE FEET, AND PREFERABLY TEN FEET, BETWEEN THE OUTSIDE OF ANY EXISTING OR PROPOSED VACUUM SANITARY SEWER.
3. NEW OR RELOCATED, UNDERGROUND WATER MAINS SHALL BE LAID TO PROVIDE A HORIZONTAL DISTANCE OF AT LEAST SIX FEET, AND PREFERABLY TEN FEET, BETWEEN THE OUTSIDE OF THE MAIN AND THE OUTSIDE OF ANY EXISTING OR PROPOSED GRAVITY OR PRESSURE SANITARY SEWER, WASTEWATER FORCE MAIN, OR RECLAIMED WATER MAIN NOT REGULATED UNDER PART III OF CHAPTER 62-610, F.A.C. THE MINIMUM HORIZONTAL SEPARATION DISTANCE BETWEEN WATER MAINS AND GRAVITY SANITARY SEWERS SHALL BE REDUCED TO THREE FEET WHERE THE BOTTOM OF THE WATER MAIN IS LAID AT LEAST SIX INCHES ABOVE THE TOP OF THE SEWER.
4. NEW OR RELOCATED, UNDERGROUND WATER MAINS SHALL BE LAID TO PROVIDE A HORIZONTAL DISTANCE OF AT LEAST TEN FEET BETWEEN THE OUTSIDE OF MAIN AND ALL PARTS OF ANY EXISTING OR PROPOSED "ON SITE SEWAGE TREATMENT AND DISPOSAL SYSTEM".
5. NEW OR RELOCATED, UNDERGROUND WATER MAINS CROSSING ANY EXISTING OR PROPOSED GRAVITY OR VACUUM SANITARY SEWER OR STORMSEWER SHALL BE LAID SO THE OUTSIDE OF THE MAIN IS AT LEAST SIX INCHES, ABOVE OR AT LEAST TWELVE INCHES, BELOW THE OUTSIDE OF THE OTHER PIPELINE. HOWEVER, IT IS PREFERABLE TO LAY THE WATER MAIN ABOVE THE OTHER PIPELINE.
6. NEW OR RELOCATED, UNDERGROUND WATER MAINS, CROSSING ANY EXISTING OR PROPOSED PRESSURE SANITARY SEWER, WASTEWATER OR STORMWATER FORCE MAIN, OR RECLAIMED WATER MAIN SHALL BE LAID SO THE OUTSIDE OF THE WATER MAIN IS AT LEAST TWELVE INCHES ABOVE OR BELOW THE OUTSIDE OF THE OTHER PIPELINE. HOWEVER, IT IS PREFERABLE TO LAY THE WATER MAIN ABOVE THE OTHER PIPELINE.
7. AT THE UTILITY CROSSING ONE FULL LENGTH OF THE MAIN PIPE SHALL BE CENTERED ABOVE OR BELOW THE OTHER PIPELINE SO THE MAIN JOINTS WILL BE AS FAR AS POSSIBLE FROM THE OTHER PIPELINE. ALTERNATELY, AT SUCH CROSSINGS, THE PIPES SHALL BE ARRANGED SO THAT THE WATER MAIN JOINTS ARE AT LEAST THREE FEET FROM ALL JOINTS IN VACUUM SANITARY SEWERS, STORM SEWERS, STORMWATER FORCE MAINS, OR PIPELINES CONVEYING RECLAIMED WATER, AND AT LEAST SIX FEET FROM ALL JOINTS IN PRESSURE SANITARY SEWERS, WASTEWATER FORCE MAINS, OR RECLAIMED WATER MAINS NOT REGULATED UNDER PART III OF CHAPTER 62-610, F.A.C.
8. FOR SEPARATION BETWEEN WATER MAINS AND SANITARY SEWER MANHOLE, NO WATER MAIN SHALL PASS THROUGH, OR COME INTO CONTACT WITH ANY PART OF A SANITARY SEWER MANHOLE.
9. WATER MAINS SHALL NOT BE CONSTRUCTED OR ALTERED TO PASS THROUGH OR COME IN CONTACT WITH ANY PART OF A STORM SEWER MANHOLE OR INLET STRUCTURE.

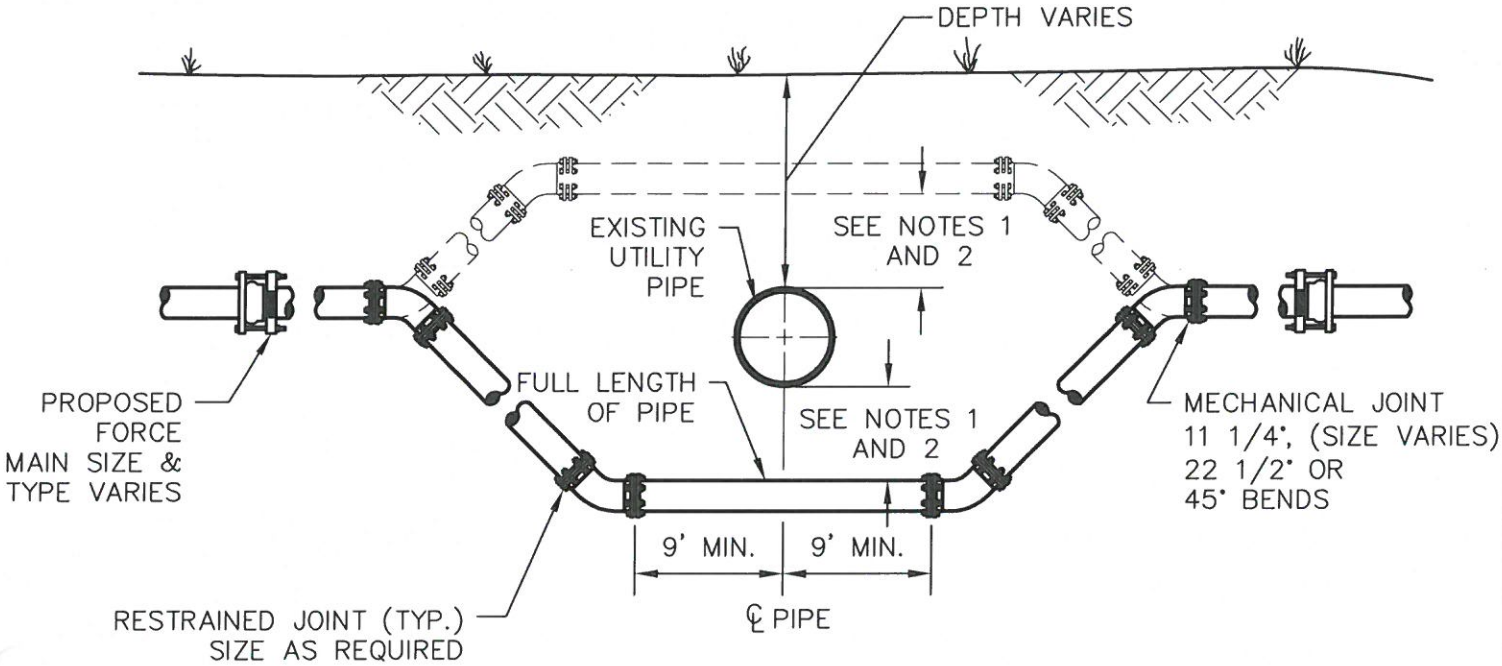

NOTES:

1. NEW OR RELOCATED, UNDERGROUND WATER MAINS CROSSING ANY EXISTING OR PROPOSED GRAVITY OR VACUUM SANITARY SEWER OR STORMSEWER SHALL BE LAID SO THE OUTSIDE OF THE MAIN IS AT LEAST SIX INCHES, ABOVE OR AT LEAST TWELVE INCHES, BELOW THE OUTSIDE OF THE OTHER PIPELINE. HOWEVER, IT IS PREFERABLE TO LAY THE WATER MAIN ABOVE THE OTHER PIPELINE.
2. NEW OR RELOCATED, UNDERGROUND WATER MAINS, CROSSING ANY EXISTING OR PROPOSED PRESSURE SANITARY SEWER, WASTEWATER OR STORMWATER FORCE MAIN, OR RECLAIMED WATER MAIN SHALL BE LAID SO THE OUTSIDE OF THE WATER MAIN IS AT LEAST TWELVE INCHES ABOVE OR BELOW THE OUTSIDE OF THE OTHER PIPELINE. HOWEVER, IT IS PREFERABLE TO LAY THE WATER MAIN ABOVE THE OTHER PIPELINE.

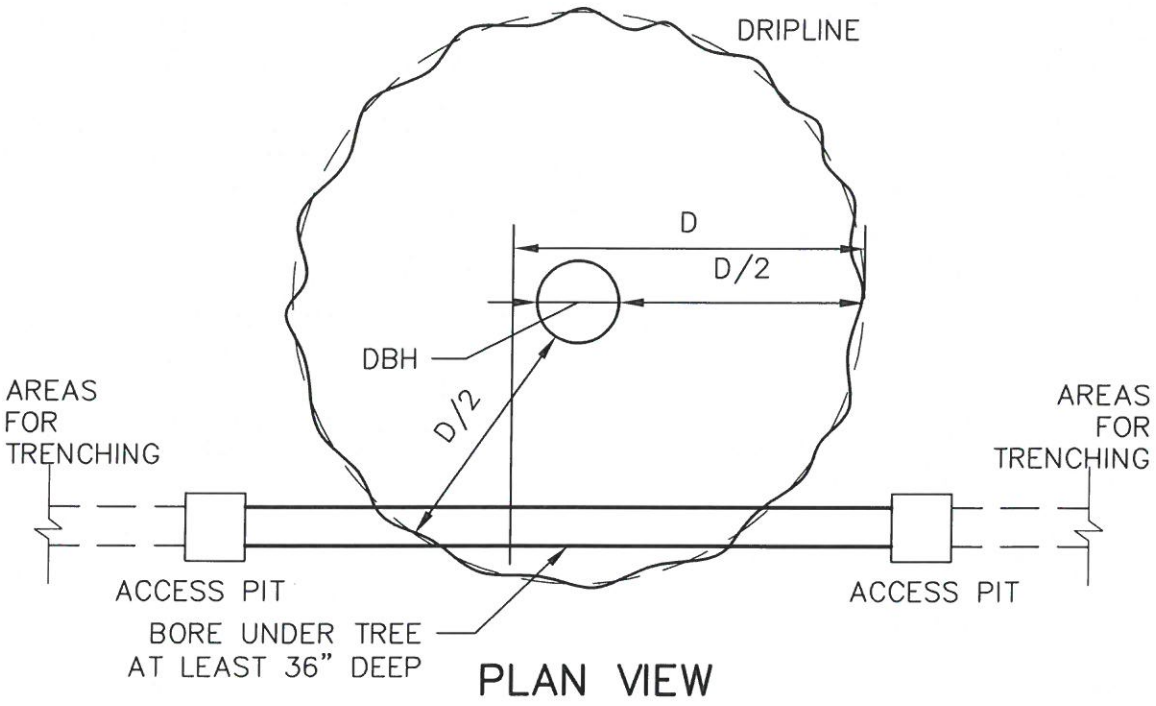

PLAN VIEW

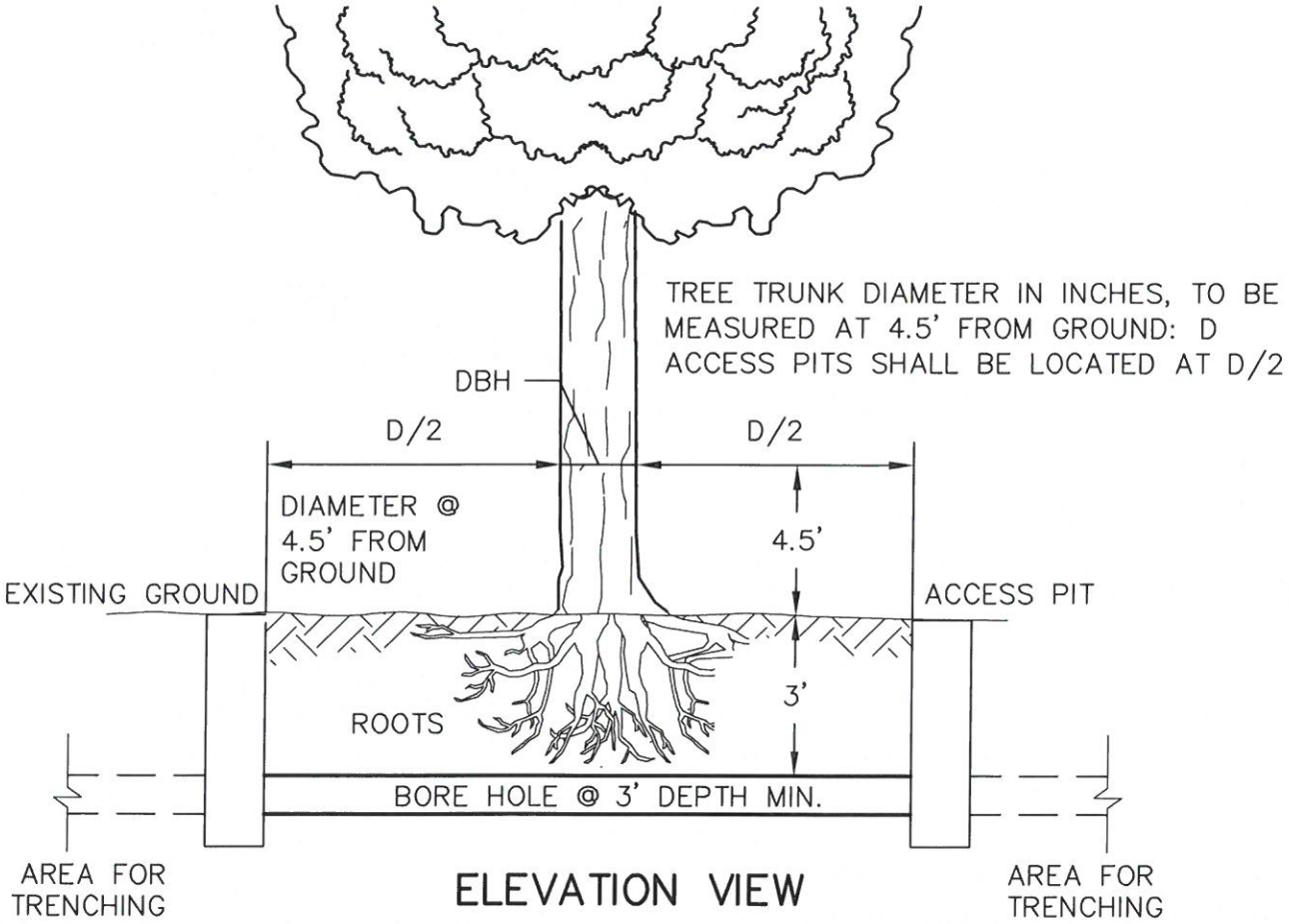

ELEVATION VIEW

CITY OF GROVELAND STANDARD DETAILS: GENERAL

CITY OF GROVELAND ESTABLISHED 1922

METZGER & WILLARD, INC.
Civil • Environmental Engineers • Surveyors
8600 Hidden River Parkway, Suite 550
Tampa, Florida 33637 (813) 977-6005

TRENCHING LIMITATIONS AROUND TREES

DATE: JULY 7, 2008
SCALE: N.T.S.

G-13

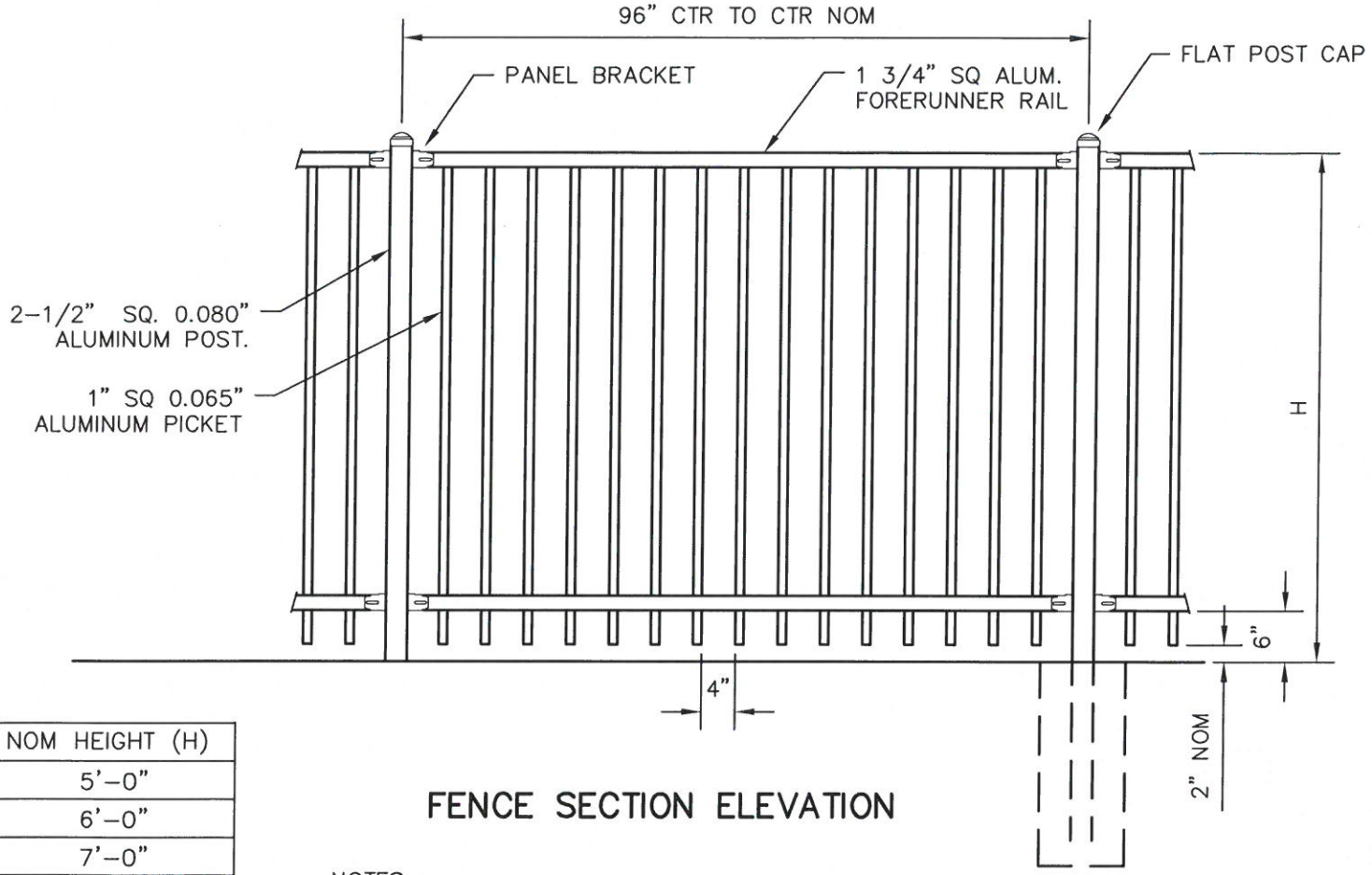

NOM HEIGHT (H)
5'-0"
6'-0"
7'-0"
8'-0"

FENCE SECTION ELEVATION

NOTES:

1. FOOTING WIDTH TO BE (4)X POST WIDTH. MINIMUM DEPTH 36".
2. NOMINAL 8' SECTION LENGTH AND 1" PICKETS.

CITY OF GROVELAND STANDARD DETAILS: GENERAL

CITY OF GROVELAND ESTABLISHED 1922

METZGER & WILLARD, INC.
Civil • Environmental Engineers • Surveyors
8600 Hidden River Parkway, Suite 550
Tampa, Florida 33637 (813) 977-6005

STANDARD FENCE DETAIL

DATE: JULY 7, 2008
SCALE: N.T.S.

G-14

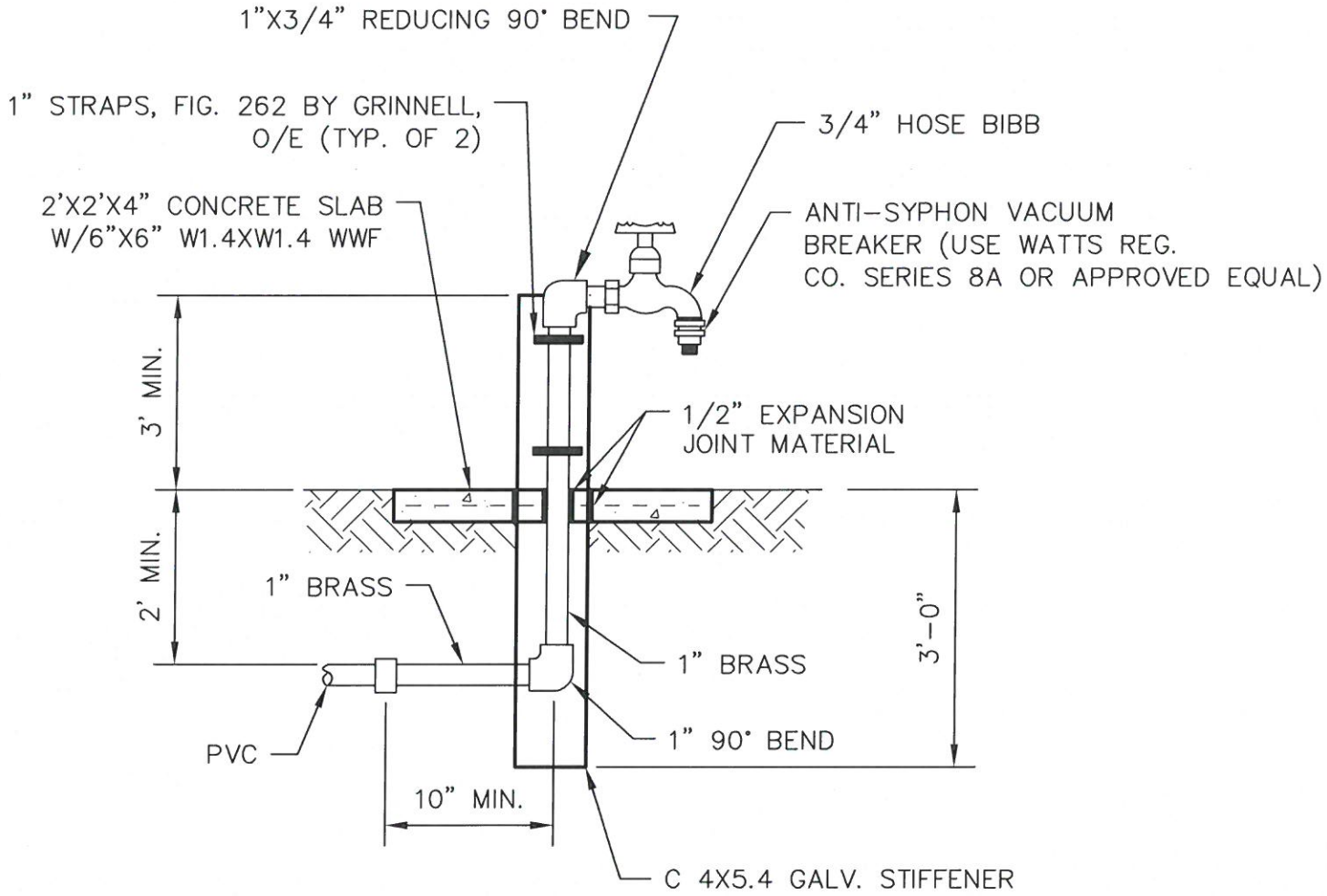

CITY OF GROVELAND STANDARD DETAILS: GENERAL

METZGER & WILLARD, INC.
Civil • Environmental Engineers • Surveyors
8600 Hidden River Parkway, Suite 550
Tampa, Florida 33637 (813) 977-6005

HOSE BIBB & VACUUM BREAKER

DATE: JULY 7, 2008
SCALE: N.T.S.

G-15

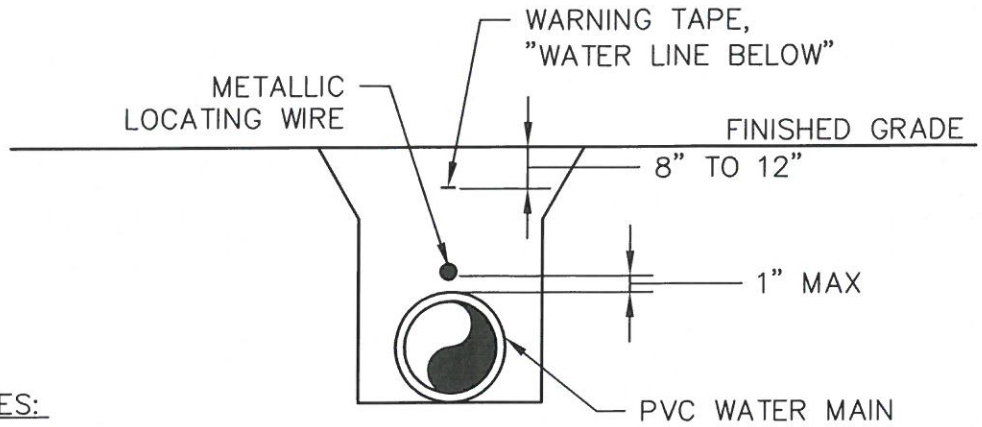

NOTES:

1. ALL PVC PIPE SHALL REQUIRE INSULATED METALLIC LOCATING WIRE (10 GAUGE COPPER/UF INSULATION) CAPABLE OF DETECTION BY A CABLE LOCATOR.
2. WIRE SHALL BE ATTACHED TO THE TOP OF PIPE WITH DUCT TAPE, AT LEAST FIVE TIMES PER JOINT. LOCATING WIRE SHALL TERMINATE AT THE TOP OF EACH VALVE BOX.
3. PROVIDE POTTING COMPOUND AT ALL TRACER WIRE JUNCTIONS AND SPLICES.
4. EXTEND TRACER WIRE INTO METER BOXES TO CURB STOP.

PIPE LOCATING WIRE DETAIL

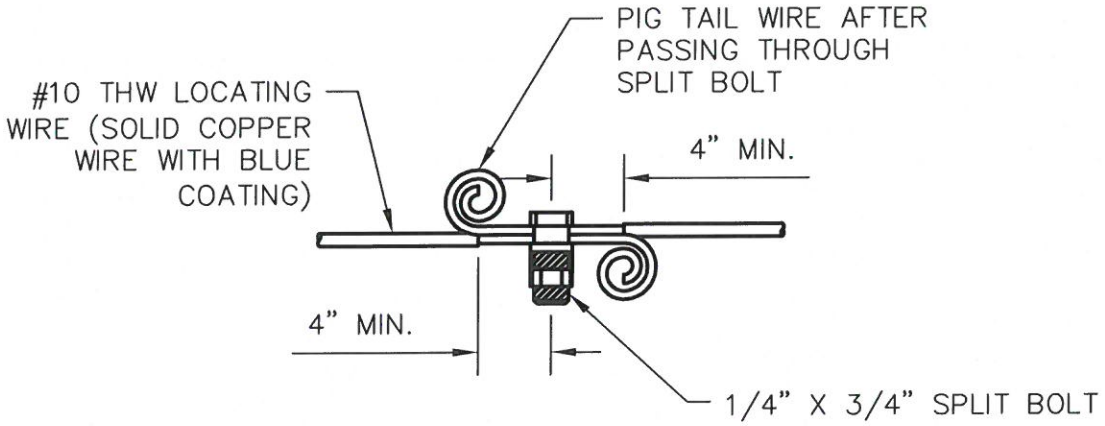

NOTES:

1. THE ENDS OF ALL LOCATING WIRES, WHETHER THEY ARE SPLICED, CONNECTED, OR TERMINATED, SHALL HAVE THE LAST THREE INCHES PIG TAILED AS DETAILED HEREON.
2. AFTER INSTALLATION OF THE LOCATING WIRE THE SYSTEM SHALL BE SUBJECTED TO TESTING, IN THE PRESENCE OF CITY UTILITIES STAFF PRIOR TO BACKFILL, IN ORDER TO INSURE THAT THE SYSTEM IS FUNCTIONAL.

LOCATING WIRE DETAIL